MECHANICAL PARTS LISTING w/OPTIONS
SP-64 PISTON FILLER/DEPOSITOR
09210A (SP-64-001A)

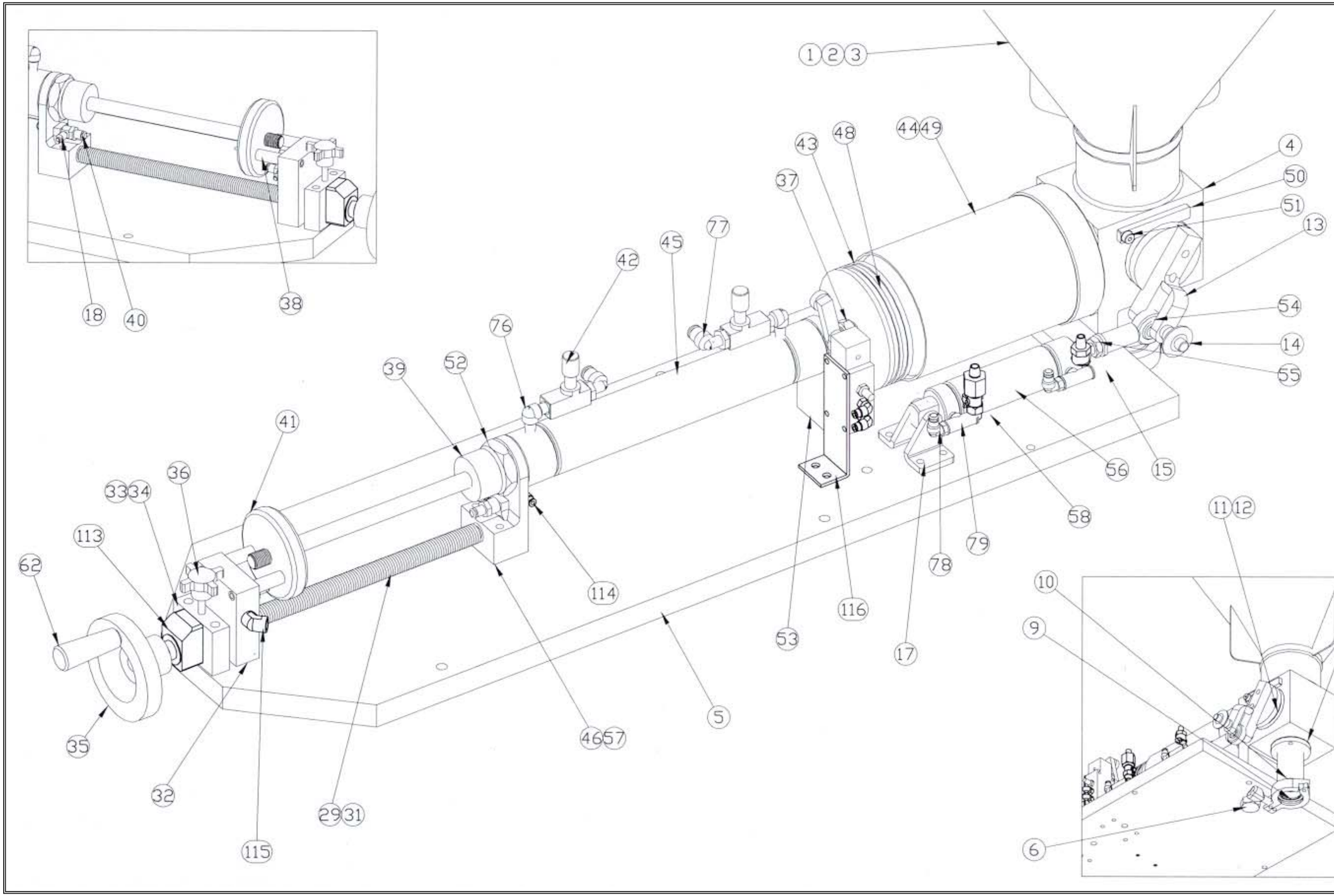

MECHANICAL PARTS LISTING w/OPTIONS
SP-64 PISTON FILLER/DEPOSITOR
09210A (SP-64-001A)

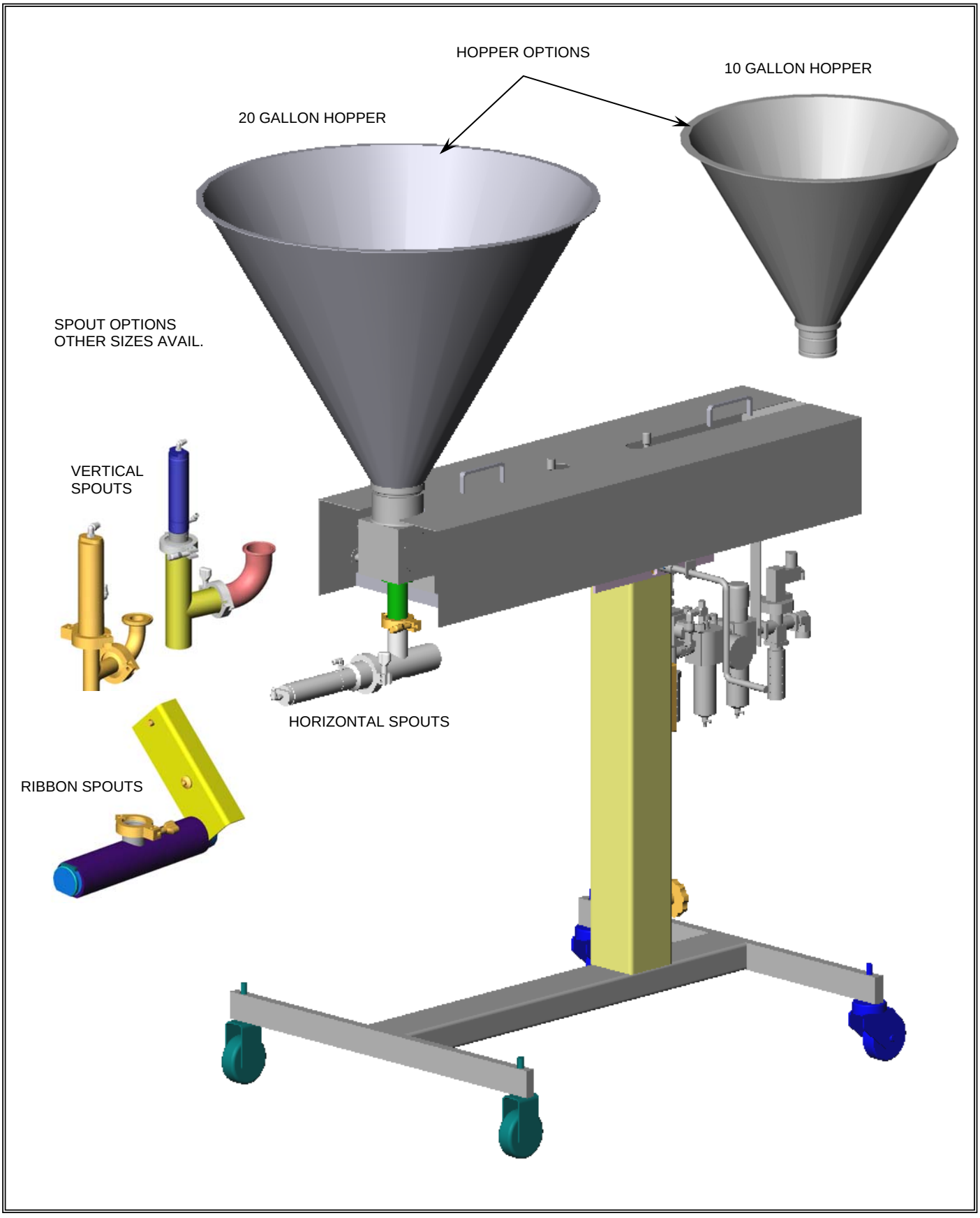

MECHANICAL PARTS LISTING w/OPTIONS
SP-64 PISTON FILLER/DEPOSITOR
09210A (SP-64-001A)

ITEM.	NOTES:	QTY	PART NO.	DESCRIPTION
01		--	SEE OPTIONS ON PAGE 4.	HOPPER / ADAPTER
02		1	SEE OPTIONS ON PAGE 5.	O-RING (HOPPER / ADAPT)
03		2	SEE OPTIONS ON PAGE 5.	O-RING (HOPPER / ADAPT)
04		1	00102-001	HEAD, PRODUCT STANDARD
05		1	SEE OPTIONS ON PAGE 5.	DEPOSITOR BASE PLATE
06		1	HB010-12C-14SS	BOLT, HEX HEAD 3/4”-10
07		1	SEE OPTIONS ON PAGE 5.	GASKET, SPOUT ADAPTER
08		--	SEE OPTIONS ON PAGE 5.	ADAPTER, SPOUT
09		--	SEE OPTIONS ON PAGE 5.	GASKET, TRI
10		--	SEE OPTIONS ON PAGE 5.	CLAMP, HINGED 1-1/2” TRI
11		--	SEE OPTIONS ON PAGE 5.	O-RING (PRODUCT VALVE)
12		--	SEE OPTIONS ON PAGE 5.	VALVE, PRODUCT
13		1	00108-005	H-ARM
14		1	09190-127	PIN, QUICK RELEASE
15	H	--	09192-037	QUICK DISCONNECT (SPOUT OPTION)
17		1	09155-107	BRACKET, PIVOT
18	A,G	2	09192-059	CONNECTOR
29		1	HB160-08--00SS	WASHER, AERONAUTICAL 1/2”ID
31		1	00115-005	ROD, STROKE ADJUST
32		1	00117-003	BLOCK, BLEEDER
33	B	1	09180-095	BUSHING, SLEEVE
34	B	1	00116-005	BLOCK, STROKE ADJUST BEARING
35		1	09190-180	WHEEL, HAND
36		1	09190-121	KNOB, HAND
37		2	HB050-10F-00SS	NUT, JAM 5/8”-18
38		2	00117-005	BUTTON, STOP DELRIN
39		1	09117-010	RING, STROKE STOP
40	A	2	09155-048	VALVE, LIMIT
41		1	00118-001	DISC, STROKE STOP
42	A	2	09160-032	VALVE, FLOW CONTROL
43		--	SEE OPTIONS ON PAGE 5&6.	O-RING (PROD PISTON)
44		1	09180-682	ORING, CYLINDER
45	A	1	09155-209	CYLINDER, AIR MAIN
46	D	1	09180-105	BUSHING, SLEEVE
48		--	SEE OPTIONS ON PAGE 6.	PISTON, PRODUCT
49		--	SEE OPTIONS ON PAGE 6&7.	CYLINDER, PRODUCT
50		1	00119-001	BAR, LOCK
51		1	HB080-05--02SS	BOLT, SHOULDER 5/16”D
52		2	09155-135	NUT, MOUNTING (AIR CYLINDER)
53		1	00114-001	MOUNT, AIR CYLINDER FRONT FOOT
54		1	09180-266	ROD END
55		1	HB050-07F-00SS	NUT, JAM 7/16”-20
56	A	1	09155-176	CYLINDER, AIR (PRODUCT VALVE)
57	D	1	00113-001	MOUNT, AIR CYLINDER REAR FOOT
58	H	--	09192-049 SPOUT OPTION	QUICK DISCONNECT
62		1	09190-125	HANDLE
63/65		--	SEE OPTIONS ON PAGE 7.	STAND
66		2	SEE OPTIONS ON PAGE 7.	CASTER, RIGID
67		2	SEE OPTIONS ON PAGE 7.	CASTER, SWIVEL
68		1	09190-122	LOCK COLUMN KNOB
76	A	2	09190-490	ELBOW, M PIPE 90D 1/4”NPT

MECHANICAL PARTS LISTING w/OPTIONS
SP-64 PISTON FILLER/DEPOSITOR
09210A (SP-64-001A)

ITEM.	NOTES:	QTY	PART NO.	DESCRIPTION
77	A,G	2	09192-008	ELBOW
78	G	4	09192-007	ELBOW
79		2	09192-011	TEE, BRANCH M 1/8"NPT
80		1	SEE OPTIONS ON PAGE 7.	COVER, DEPOSITOR SP-64
81		1	09183-202	JACK - SIDEWIND
113		1	09190-575	INDICATOR, POSITION (COUNTER)
114		1	09192-078	ELBOW MALE T-M-NPT 5/32x1/8
115		1	09192-086	CONN HEXHD&SK T-M-NPT 1/4x1/8
116		2	09228-384	BRACKET SWITCH

ITEMS NOT SHOWN

--		1	09192-012	TEE, BRANCH M 1/4"NPT
--	G	1	09192-086	CONNECTOR
--		1	09192-147	REDUCER, PIPE 1/2"-3/8"NPT
--		2	09192-165	CONNECTOR, NIPPLE PIPE 3/8"NPT
--		1	09192-494	ELBOW, STREET 90D 1/8"NPT
--		1	09192-495	ELBOW, STREET 45D 3/8"NPT
--		1	09192-513	REDUCER, NIPPLE 1/2"-3/8"NPT
--		1	09192-526	ELBOW, STREET 90D 1/2"NPT
--		1	09192-532	TEE, F PIPE 1/8"NPT
--		1	09192-567	TEE, STREET RUN M 3/8"NPT
--		1	09192-627	FITTING, SWIVEL 1/2"NPTx3/8"NPT
--		2	HB010-04C-06SS	BOLT, HEX HEAD 1/4"-20x3/4"L
--		2	HB010-04C-10SS	BOLT, HEX HEAD 1/4"-20x1-1/4"L
--		4	HB010-04C-12SS	BOLT, HEX HEAD 1/4"-20x1-1/2"L
--		4	HB010-04C-14SS	BOLT, HEX HEAD 1/4"-20x1-3/4"L
--		2	HB010-04C-18SS	BOLT, HEX HEAD 1/4"-20x2-1/4"L
--		2	HB010-05C-18SS	BOLT, HEX HEAD 5/16"-18x2-1/4"L
--		14	HB030-04--00SS	WASHER, LOCK SPLIT 1/4'
--		2	HB030-05--00SS	WASHER, LOCK SPLIT 5/16"
--		4	HB040-04--00SS	WASHER, FLAT 1/4"
--		2	HB040-05--00SS	WASHER, FLAT 5/16"
--		3	HB040-06--00SS	WASHER, FLAT 3/8"
--		1	HB040-12--00SS	WASHER, FLAT 3/4"
--		2	HB100-06--12SS	PIN, DOWEL 3/8"Dx1-1/2"L
--		1	LAB001	LABEL NAME

SELECTED OPTIONS ***COLORED IN O IS YOUR OPTION***

O	01		1	09231-001	HOPPER, 10 GALLON CONICAL
O	01		1	09231-003	HOPPER, 20 GALLON CONICAL
O	01		1	09231-007	HOPPER, 40 GALLON
O	01		1	09231-045	HOPPER, 40 GALLON CONICAL
O	01		1	09231-047	HOPPER, 10 GALLON CONICAL DBL WALL
O	01		1	09231-049	HOPPER, 10 GALLON CONICAL w/RISER
O	01		1	09231-059	HOPPER, 10 GALLON CONICAL DBL WALL
O	01		1	09231-061	HOPPER, 20 GALLON CONICAL DBL WALL
O	01		1	09060-063	HOPPER, 10 GALLON CONICAL DBL WALL w/FTGS
O	01		1	09822-010	HOPPER, 20 GALLON CONICAL DBL WALL HT'D
O	01	L	1	09224-223	ADAPTER DIRECT PRODUCT FILL 2"TRI 316SS
O	01	L	1	09224-222	ADAPTER DIRECT PRODUCT FILL 2"TRI 304SS
O	01	L	1	09224-149	ADAPTER DIRECT PRODUCT FILL 3"TRI 304SS

MECHANICAL PARTS LISTING w/OPTIONS
SP-64 PISTON FILLER/DEPOSITOR
09210A (SP-64-001A)

ITEM.	NOTES:	QTY	PART NO.	DESCRIPTION
O 02		1	09180-688	ORING, BUNA 3-1/8x3-1/2x3/16.D
O 03		2	09180-658	ORING, BUNA 3x3-1/4x1/8D
O 02		1	09181-868	ORING, VITON 3-1/8x3-1/2x3/16.D
O 03		2	09182-814	ORING, VITON 3x3-1/4x1/8D
O 05		1	00120-001	BASE PLATE (STD)
O 05		1	00120-010	BASE PLATE ANODIZED
O 05		1	00120-017	BASE PLATE (SPCL)
O 07		1	09180-742	GASKET, SPOUT ADAPTER (BUNA)
O 07		1	09181-127	GASKET, SPOUT ADAPTER (VITON)
O 07		1	09180-682	ORING, SPOUT ADAPTER FOR 1/4oz CYLINDER
O 08	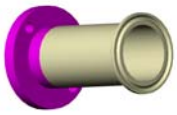	1	00121-009	ADAPTER, SPOUT LONG. (STD)
O 08		1	00121-007	ADAPTER, SPOUT 90D 1-1/2" 304SS
O 08		1	00121-008	ADAPTER, SPOUT 90D OPP.1-1/2" 304SS
O 08		1	00121-012	ADAPTER, SPOUT REDC. 2"T:1-1/2"PORT
O 08		1	00121-010	ADAPTER, SPOUT 90D 1-1/2" 316SS
O 09		1	09190-051	GASKET, 1-1/2" TRI (BUNA)
O 09		1	09190-052	GASKET, 2" TRI (BUNA)
O 09		1	09190-368	GASKET, 1-1/2" TRI (VITON)
O 09		1	09190-369	GASKET, 2" TRI (VITON)
O 10		1	09190-045	CLAMP, TRI 1-1/2" HVY DUTY *(STANDARD)*
O 10		1	09190-046	CLAMP, TRI 2" HVY DUTY *(STANDARD)*
O 10		1	09190-040	CLAMP, TRI 1-1/2"
O 10		1	09190-041	CLAMP, TRI 2"
O 11	*(PRODUCT VALVES)*	2	09180-682	ORING, BUNA *(PROD VLV'S)*
O 11		2	09180-683	ORING, SILICONE
O 11		2	09181-111	ORING, WHITE BUNA
O 11		2	09182-412	ORING, ETHYLENE PROPYLENE
O 11		2	09181-063	ORING, VITON
O 12	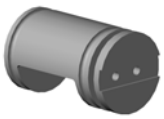	1	00110-001	VALVE, PRODUCT DAIRY METAL
O 12		1	00110-002	VALVE, PRODUCT DELRIN
O 12		1	09210-048	VALVE, PRODUCT DEL 1" PORT
O 12		1	09210-076	VALVE, PRODUCT DM 1" PORT
O 43	*(PRODUCT PISTONS)*	2	09180-604	ORING, BUNA 1/4oz BLACK
O 43		2	09180-605	ORING, SILICONE 1/4oz RED
O 43		2	09181-343	ORING, W BUNA 1/4oz WHITE
O 43		2	09181-658	ORING, VITON 1/4oz VITON
O 43		2	09180-632	ORING, BUNA 04oz BLACK
O 43		2	09180-633	ORING, SILICONE 04oz RED
O 43		2	09181-108	ORING, W BUNA 04oz WHITE
O 43		2	09180-642	ORING, BUNA 08oz BLACK
O 43	V-SEALS	2	09180-643	ORING, SILICONE 08oz RED
O 43		2	09181-427	ORING, W BUNA 08oz WHITE
O 43		1	09182-668	V-SEAL KIT, TEFLON 08oz
O 43		2	09180-670	ORING, BUNA 12oz BLACK
O 43		2	09180-671	ORING, SILICONE 12oz RED
O 43		2	09181-549	ORING, W BUNA 12oz WHITE
O 43		1	09182-978	V-SEAL KIT, TEFLON 12oz

MECHANICAL PARTS LISTING w/OPTIONS
SP-64 PISTON FILLER/DEPOSITOR
09210A (SP-64-001A)

	ITEM.	NOTES:	QTY	PART NO.	DESCRIPTION	
O	43		2	09180-676	ORING, BUNA	16oz BLACK
O	43		2	09180-677	ORING, SILICONE	16oz RED
O	43		2	09181-473	ORING, W BUNA	16oz WHITE
O	43		1	09182-441	V-SEAL KIT, TEFLON	16oz
O	43		2	09180-684	ORING, BUNA	23oz BLACK
O	43		2	09180-685	ORING, SILICONE	23oz RED
O	43		1	09182-579	V-SEAL KIT, TEFLON	23oz
O	43		2	09181-550	ORING, W BUNA	23oz WHITE
O	43		2	09180-690	ORING, BUNA	32oz BLACK
O	43		2	09180-691	ORING, SILICONE	32oz RED
O	43		2	09181-116	ORING, W BUNA	32oz WHITE
O	43		1	09181-895	V-SEAL KIT, TEFLON	32oz
O	43		2	09180-701	ORING, BUNA	64oz BLACK
O	43		2	09180-702	ORING, SILICONE	64oz RED
O	43		2	09180-774	ORING, W BUNA	64oz WHITE
O	43		1	09182-434	V-SEAL KIT, TEFLON	64oz
O	43		2	09180-704	ORING, BUNA	64oz BLACK (TRUE)
O	48	M	1	09210-079	PISTON, PRODUCT DM	1/4oz 1/2" Ø
O	48	M	1	09228-488	PISTON ADAPTER (LIMIT SWITCH TRIGGER)	
O	48		1	00105-001	PISTON, PRODUCT DM	04oz 1" Ø
O	48		1	00105-002	PISTON, PRODUCT DEL	04oz 1" Ø
O	48		1	00105-003	PISTON, PRODUCT DM	08oz 1-1/2" Ø
O	48		1	00105-004	PISTON, PRODUCT DEL	08oz 1-1/2" Ø
O	48		1	09471-083	PISTON, PRODUCT V-SEAL	08oz 1-1/2" Ø
O	48		1	09471-082	V-SEAL COMP. PLATE	08oz
O	48		1	00105-006	PISTON, PRODUCT DM	12oz 2" Ø
O	48		1	00105-007	PISTON, PRODUCT DEL	12oz 2" Ø
O	48		1	09471-088	PISTON, PROD V-SEAL 316	12oz 2" Ø
O	48		1	09471-089	V-SEAL COMP. PLATE 316	12oz
O	48		1	09471-090	PISTON, PROD V-SEAL 304	12oz 2" Ø
O	48		1	09471-091	V-SEAL COMP. PLATE 304	12oz
O	48		1	00105-008	PISTON, PRODUCT DM	16oz 2-1/2" Ø
O	48		1	00105-009	PISTON, PRODUCT DEL	16oz 2-1/2" Ø
O	48		1	09471-071	PISTON, PRODUCT V-SEAL	16oz 2-1/2" Ø
O	48		1	09471-072	V-SEAL COMP. PLATE	16oz
O	48		1	00105-011	PISTON, PRODUCT DM	23oz 3" Ø
O	48		1	00105-012	PISTON, PRODUCT DEL	23oz 3" Ø
O	48		1	09055-046	PISTON, PRODUCT V-SEAL	23oz 3" Ø
O	48		1	09055-047	V-SEAL COMP. PLATE	23oz
O	48		1	00105-013	PISTON, PRODUCT DM	32oz 3-3/4" Ø
O	48		1	00105-014	PISTON, PRODUCT DEL	32oz 3-3/4" Ø
O	48		1	09471-009	PISTON, PRODUCT V-SEAL	32oz 3-3/4" Ø
O	48		1	09471-010	V-SEAL COMP. PLATE	32oz
O	48		1	09471-069	PISTON, PROD. V-SEAL 316ss	32oz 3-3/4" Ø
O	48		1	09471-070	V-SEAL COMP. PLATE 316ss	32oz
O	48		1	00105-016	PISTON, PRODUCT DM	64oz 4-3/4" Ø
O	48		1	00105-017	PISTON, PRODUCT DEL	64oz 4-3/4" Ø
O	48		1	00105-091	PISTON, PRODUCT DEL	64oz 5.075" Ø
O	48		1	09055-031	PISTON, PRODUCT V-SEAL	64oz 4-3/4" Ø
O	48		1	09055-032	V-SEAL COMP. PLATE	64oz
O	49		1	00104-023	CYLINDER, PRODUCT	1/4oz 1/2" Ø
O	49		1	00104-001	CYLINDER, PRODUCT	04oz 1" Ø
O	49		1	00104-002	CYLINDER, PRODUCT	08oz 1-1/2" Ø
O	49		1	00104-003	CYLINDER, PRODUCT	12oz 2" Ø

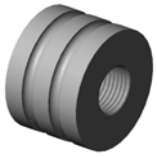

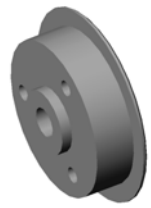

MECHANICAL PARTS LISTING w/OPTIONS
SP-64 PISTON FILLER/DEPOSITOR
09210A (SP-64-001A)

	ITEM.	NOTES:	QTY	PART NO.	DESCRIPTION
O	49	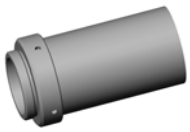	1	00104-004	CYLINDER, PRODUCT 16oz 2-1/2" Ø
O	49		1	00104-005	CYLINDER, PRODUCT 23oz 3" Ø
O	49		1	00109-001	CYLINDER, PRODUCT 32oz 3-3/4" Ø
O	49		1	00109-002	CYLINDER, PRODUCT 64oz 4-3/4" Ø
O	49		1	00109-008	CYLINDER, PRODUCT 316SS 64oz 4-3/4" Ø
O	49		1	00109-015	CYLINDER, PRODUCT 64oz 5.075" Ø
O	63/65		1	09230-127	STAND ASSY 31"+ REAR MOUNT
O	63/65		1	09230-130	STAND ASSY 31"+ CENTER MOUNT
O	63/65		1	09230-131	STAND ASSY 25"+ REAR MOUNT
O	63/65		1	09230-132	STAND ASSY 43"+ REAR MOUNT
O	63/65		1	09850-200	STAND ASSY – LOW CLEARANCE
O	63/65	N	1	09916-100	STAND ASSY - 31"+ SPEC. JACK
O	66		2	09183-201	CASTER, RIGID
O	67		2	09183-200	CASTER, SWIVEL
O	80	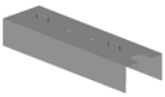	1	00142-001	COVER, FULL SP-64
O	80		1	00142-011	COVER, FULL SP-64 (SPCL CUTOUT)
O	--		1	09060-023	COVER, HOPPER 10G SMALL
O	--		1	09060-069	COVER, HOPPER 10G LARGE
O	--		1	09060-024	COVER, HOPPER 20G SMALL
O	--		1	09060-025	COVER, HOPPER 20G LARGE
O	--		1	09060-071	COVER, HOPPER 10/40 GAL LARGE
O	--		1	09060-074	COVER, HOPPER 20G LARGE W/2"tri & 2-1/2"tri
O	--	K	1	09155-671	VLV RELIEF 1"NPT SS SET PRESS
		DIRECT PRODUCT FILL ***REPLACES HOPPER***			
O	--	L	1	09224-149	ADAPTER, DIRECT PRODUCT FILL 3"TRI 304SS
O	--	L	1	09224-223	ADAPTER, DIRECT PRODUCT FILL 2"TRI 316SS
O	--	L	1	09224-222	ADAPTER, DIRECT PRODUCT FILL 2"TRI 304SS
O	--	L	1	09190-048	CLAMP, HINGED 3" TRI HVY DUTY
O	--	L	1	09190-054	GASKET, TRI 3" TRI (BUNA)
O	--	L	1	09190-401	GASKET, TRI 3" TRI (VITON)
O	--	L	1	09190-019	ADAPTER HOSE 3"Dx4.5"L GC CLAMP
		ELECTRIC FOOT SWITCH CONTROL			
O	--		1	09170-076	SWITCH FOOT ELECTRIC
O	--		1	09192-289	CORD MALE 3-PIN 12FT LONG
		PRODUCT SUCK-BACK CONTROL			
O	--		1	09192-305	FLOW CONTROL 1/8" FINE ADJUST
		MANUAL HAND SWITCH CONTROL			
O	78		1	09155-473	VLV CONTROL LOCKING LEVEL 3-WAY
O	77	G	1	09192-038	QUICK DISCONNECT
O	--	G	1	09192-037	QUICK DISCONNECT
O	--	G	1	09192-049	QUICK DISCONNECT
O	--	G	2	09192-086	CONNECTOR

MECHANICAL PARTS LISTING w/OPTIONS
SP-64 PISTON FILLER/DEPOSITOR
09210A (SP-64-001A)

ITEM.	*NOTES:*	*QTY*	*PART NO.*	*DESCRIPTION*

ADDITIONAL MECHANICAL DIAGRAM FOR DEPOSITOR MOUNTED ON STAND - WHERE APPLICABLE

05	--	00120-001	BASE PLATE
63/65	--	SEE OPTIONS PAGE 7.	STAND
66	--	SEE OPTIONS PAGE 7.	CASTER, RIGID
67	--	SEE OPTIONS PAGE 7.	CASTER, SWIVEL
68	1	09190-122	KNOB, LOCK (STAND COLUMN)
81	1	09183-202	JACK – SIDEWIND (SEE PHOTO'S BELOW)

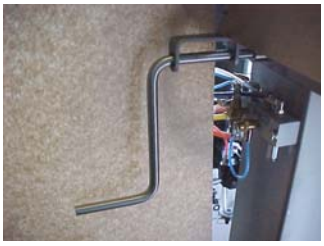
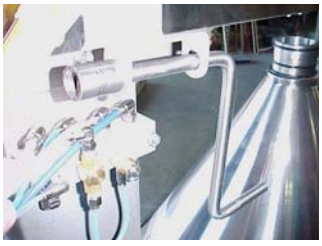

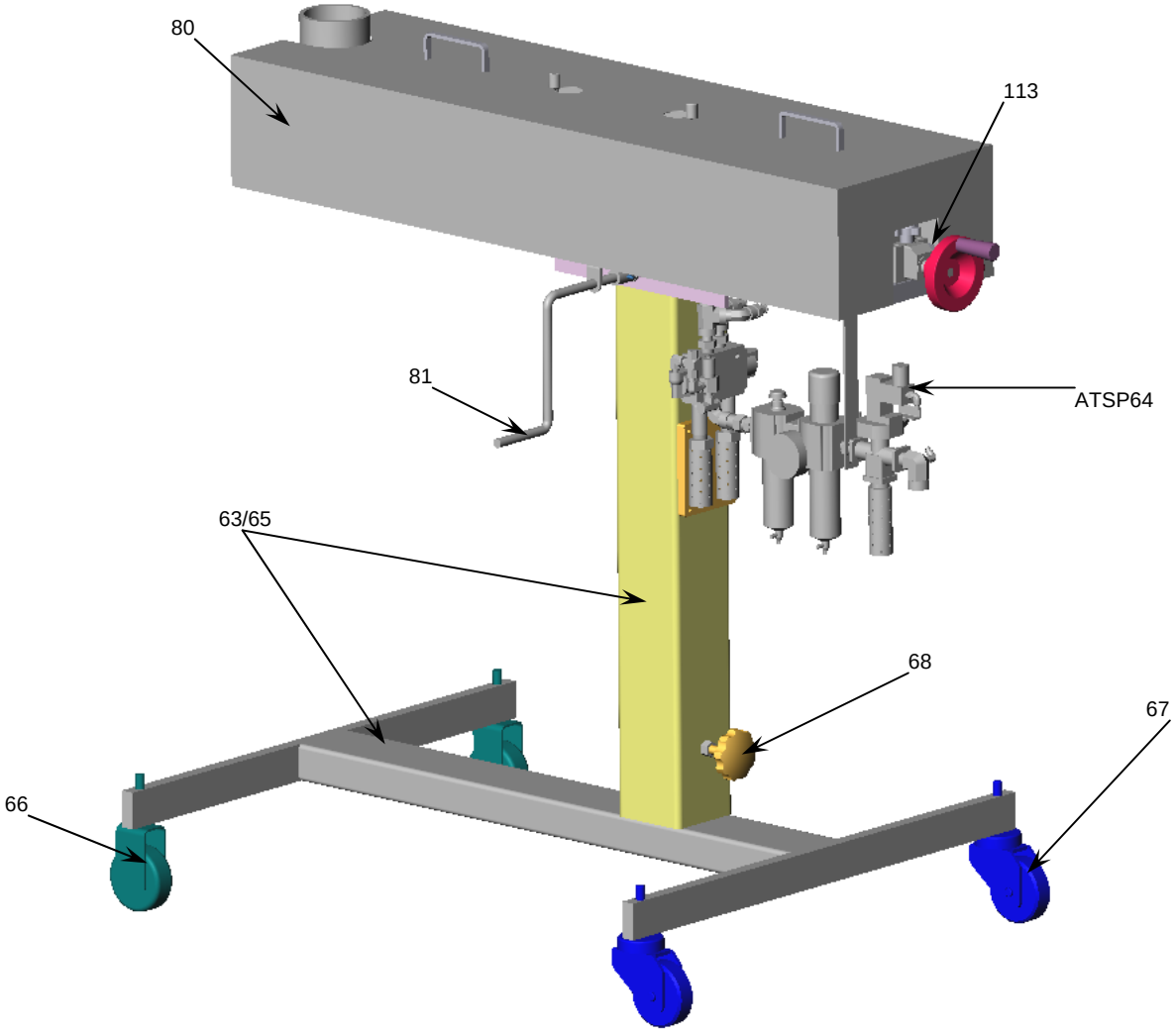

MECHANICAL PARTS LISTING w/OPTIONS
SP-64 PISTON FILLER/DEPOSITOR
09210A (SP-64-001A)

ITEM.	*NOTES:*	*QTY*	*PART NO.*	*DESCRIPTION*
ADDITIONAL MECHANICAL DIAGRAM FOR DEPOSITOR with PORTABLE AGITATOR/MIXER				
O	--	1	09180-826	MIXER AIR 1/3HP 4” PROP
O	--	1	09182-729	MIXER ELEC 1/3HP 4"PROP 110V
O	--	1	09183-879	MIXER AIR 1/3HP 4"PROP 25"L
O	--	1	09789-100	AGITATOR MNT WELDMENT 10G
O	--	1	09973-014	AGITATOR MNT WELDMENT 10G
O	--	1	09789-120	AGITATOR MNT WELDMENT 20G
O	--	1	09923-120	AGITATOR MNT WELDMENT 20G
O	--	1	09192-002	VALVE - HAND SHUT-OFF 1/4x1/4

NOTES:

A. ALSO SHOWN ON PD046 PARTS LIST AND SCHEMATIC.
B. ITEM 33 INSTALLED IN ITEM 34.
D. ITEM 46 INSTALLED IN ITEM 57.
G. SEE BACK OF MANUAL FOR COMPLETE DESCRIPTIONS AND SIZES.
H. ITEMS 15 & 58 ARE OPTIONS. (SEE PD046 SPOUT OPTION.)
J. USED IN PLACE OF ITEMS 15 & 58 w/o SPOUTS.
K. FOR 09231-047 DOUBLE WALL HOPPER. (ONLY)
L. IN LEAU HOPPER.
M. ADAPTER REQUIRED WHEN SELECTING 1/4oz PISTON
N. SEE SEPARATE PARTS LISTING & DRAWING

MECHANICAL PARTS LISTING w/OPTIONS
SP-64 PISTON FILLER/DEPOSITOR
09210A (SP-64-001A)

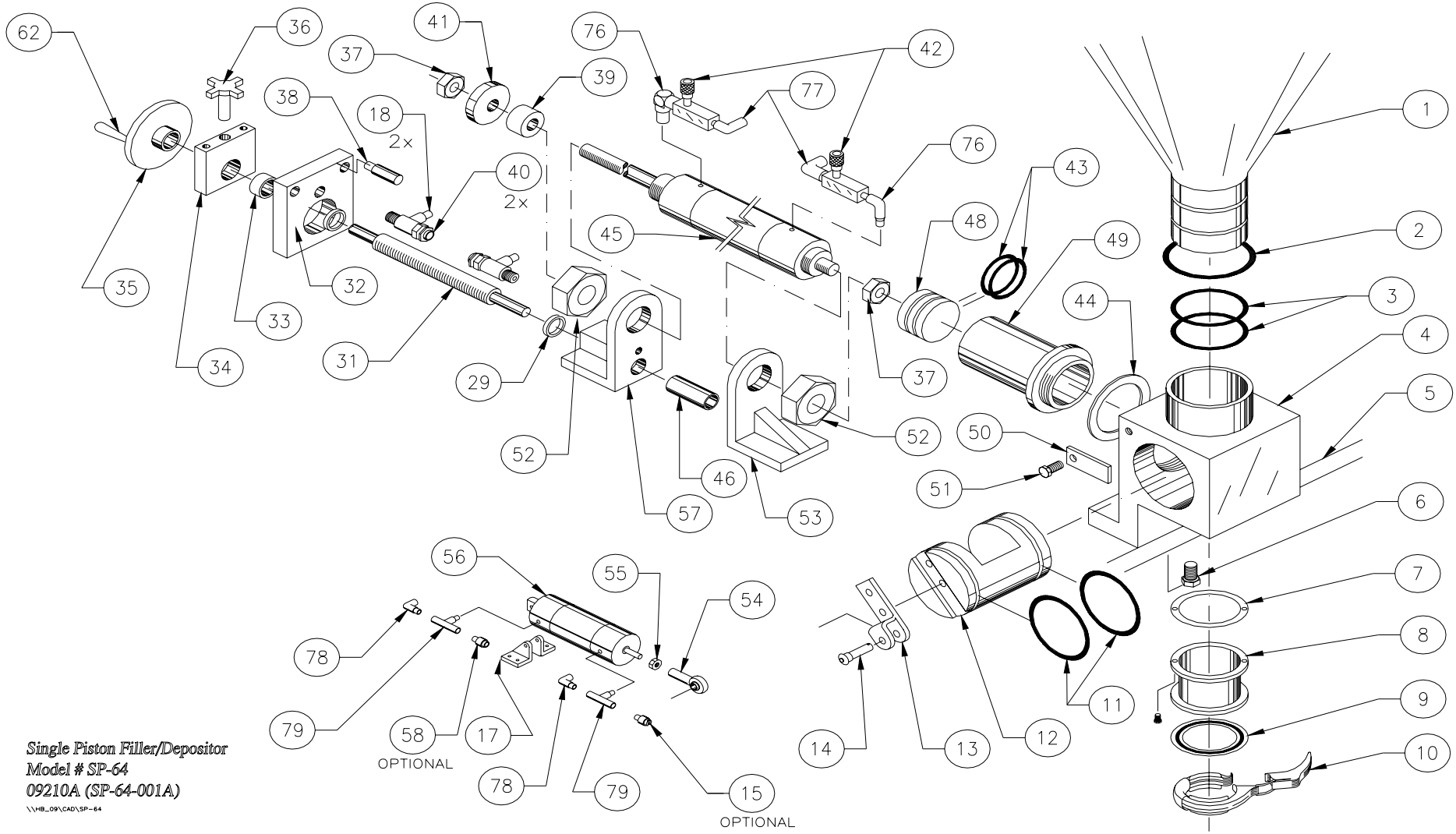

Single Piston Filler/Depositor
Model # SP-64
09210A (SP-64-001A)
\\HB_09\CAD\SP-64