Item # _____ C.S.I. Section 11420

**F R Y E R S**

# 1TR85 SERIES
## FREE STANDING GAS FRYER

**Model 1TR85A**

**1TR85A:** Solid state analog knob control behind the door. Accurate temperature control 200° to 390°F. User selectable fat melt modes. Electronic ignition.

**1TR85D:** Accurate temperature control 200-390°F with digital display. Fast recovery. Cook with compensating time or actual time. Electronic ignition. Digital temperatures: Fahrenheit or Celsius. Three melt modes. Two countdown timers. Auto boil-out mode.

**1TR85C:** Programmable computer controls with digital character display. 10 menu timers display product name and cook times. Offline programming of menu items uploaded through USB interface, software included. Accurate temperature control 200-390°F with digital display. Fast recovery. Cook with compensating time or actual time. Electronic ignition. Digital temperatures: Fahrenheit or Celsius. Three melt modes.

## SPECIFICATIONS

85 - 90 lbs. capacity free standing gas fryer, Vulcan-Hart Model No. (1TR85A) (1TR85D) (1TR85C). 90,000 BTU/hr. input. Stainless steel cabinet. Set of four 6" adjustable casters (2 locking). Stainless steel fry tank with ThreePass™ heat transfer system. Energy Star® qualified. SoftStart™ ignition system using 45,000 BTU/hr. to extend oil life during start up. Idle rate of 5,575 BTU/hr. to maintain cooking temperature. 1¼" port ball type drain valve. Twin fry baskets with plastic coated handles. Solid state analog knob control, digital, or programmable computer control systems all standard with electronic matchless ignition. Tank brush and clean-out rod included.

**Overall dimensions:**
21"w x 34⅜"d x 47⅛"h. Working height 36¼".

CSA design certified. NSF listed.

## SPECIFY TYPE OF GAS WHEN ORDERING

- ☐ Natural Gas.
- ☐ Propane Gas.

## SPECIFY ALTITUDE

The 1TR85 Series fryer does not require any special adjustments for varying altitudes ranging from 0 - 10,000 feet for either Natural or Propane gas.

## STANDARD FEATURES

- 90,000 BTU/hr. input.
- Maintains idle temperature setting with only 5,575 BTU/hr. to save energy.
- Energy saving SoftStart™ ignition system extends oil life while requiring lower BTU's.
- Energy Efficient ThreePass™ heat transfer system yielding 60.0% cooking efficiency and 72% Thermal Efficiency. ENERGY STAR® qualified.
- Stainless steel fry tank, 85 - 90 lb. capacity. Includes 10 year limited tank warranty.
- 1¼" port ball type drain valve.
- Stainless steel cabinet.
- Set of four 6" adjustable (2 locking) casters.
- Twin fry baskets with plastic coated handles.
- Hi-limit shut-off.
- Electronic matchless ignition.
- Tank brush and clean-out rod.
- One year limited parts and labor warranty.

## ACCESSORIES

- ☐ FRYMATE-VX21S add-on frymate.
- ☐ Stainless steel tank cover – doubles as a work surface top.
- ☐ Connecting Kit(s) – Connects two fryers together (brackets, grease strip and hardware included).
- ☐ Single large basket – 18¾"w x 17¼"d x 5½"h.
- ☐ Set of twin baskets – 8¾"w x 16¾"d x 6"h.
- ☐ ¾" Flexible gas hose with quick disconnect.
- ☐ 10" high stainless steel removable splash guard.

## OPTIONS

- ☐ Second year extended limited parts and labor warranty


VULCAN
*a division of ITW Food Equipment Group LLC*

P.O. Box 696 ▪ Louisville, KY 40201 ▪ Toll-free: 1-800-814-2028 ▪ Local: 502-778-2791 ▪ Quote & Order Fax: 1-800-444-0602

# 1TR85 SERIES
## FREE STANDING GAS FRYER

## INSTALLATION INSTRUCTIONS

1. An exterior gas regulator has been installed on the incoming gas manifold of the fryer and has been preset at the factory for the specific gas type – Natural or Propane Gas.
   - Natural Gas 8.0" (203 mm) W.C.
   - Propane Gas 11.0" (279 mm) W.C.
2. An adequate ventilation system is required for Commercial Cooking Equipment. Information may be obtained by writing to the National Fire Protection Association, Batterymarch Park, Quincy, MA 02269. When writing refer to NFPA No. 96.
3. All models require a 6" (152 mm) clearance at both sides and rear adjacent to combustible construction.All models require a 16" (407 mm) minimum clearance to adjacent open top burner units.
4. This appliance is manufactured for commercial installation only and is not intended for home use.

**SERVICE CONNECTIONS:**

(P1) ½" (13 mm) ID and ¾" (19 mm) OD rear gas connection.

(E1) NEMA 5-15P 120 Volt cord & plug supplied with fryers.

**NOTE:** In line with its policy to continually improve its product, Vulcan reserves the right to change materials and specifications without notice.

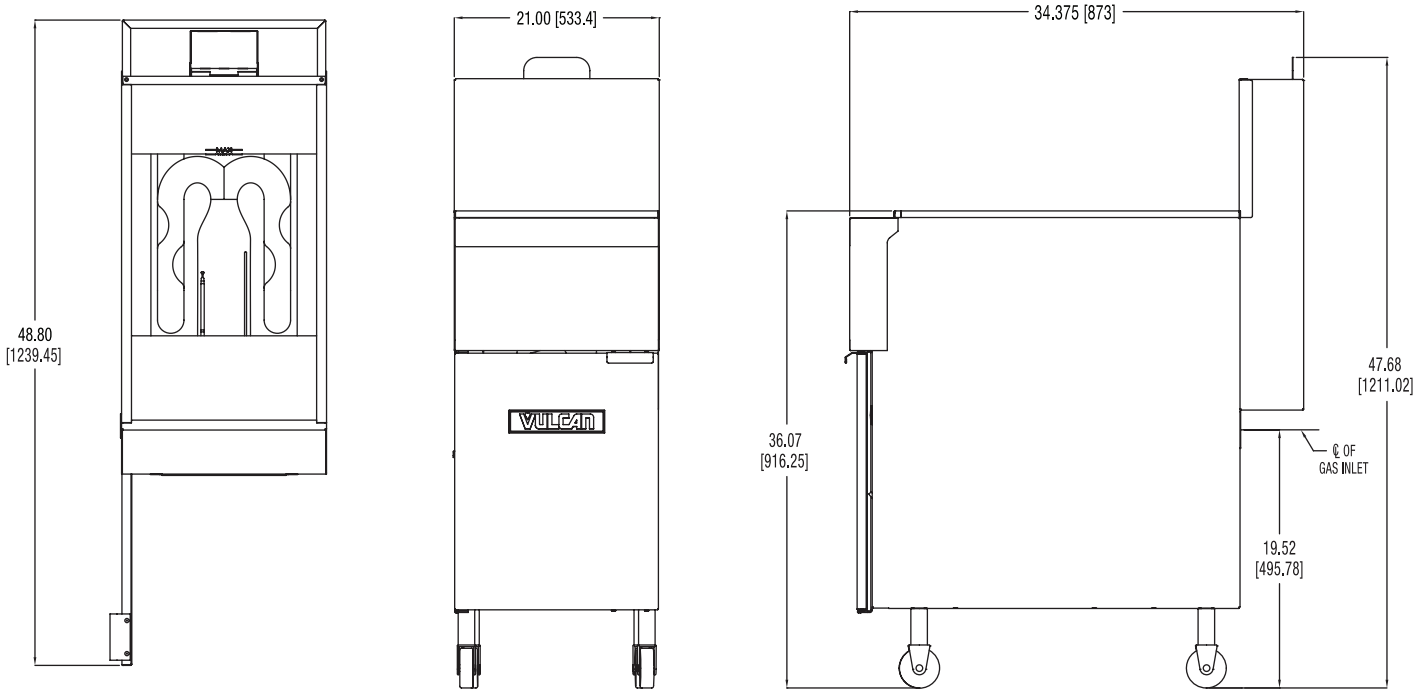


| MODEL | Width | Depth | Overall Height | Working Height | Tank Size | BTU/hr. | Fry Comp. Capacity | Approx. Shipping Weight |
|---|---|---|---|---|---|---|---|---|
| 1TR85A<br>1TR85D<br>1TR85C | 21" | 34⅜" | 47⅛" | 36¼" | 19½" x 18" | 90,000 | 85 - 90 lbs. | 256 lbs. |

This appliance is manufactured for commercial use only and is not intended for home use.

a division of ITW Food Equipment Group LLC

P.O. Box 696 ■ Louisville, KY 40201 ■ Toll-free: 1-800-814-2028 ■ Local: 502-778-2791 ■ Quote & Order Fax: 1-800-444-0602