Walker, Michigan, U.S.A. 49534-7564

OPERATION AND SERVICE MANUAL

MODELS 908-N, 918-N, 0938-N

BREAD SLICERS

0908S20020-CV

PAGE INTENTIONALLY LEFT BLANK

Oliver Packaging and Equipment Company (800) 253-3893
3236 Wilson DR NW Walker, MI 49534 www.oliverquality.com

908-N, 918-N, 938-N SIMPLE SLICE BREAD SLICERS

INDEX

Section Description	Document No.	Page No.
SAFETY INSTRUCTIONS	0908S20022	1-1
DESCRIPTION/ SPECIFICATIONS	0908S20023	2-1
Description		2-1
Specifications		2-1
Machine Overview		2-4
INSTALLATION INSTRUCTIONS	0908S20024	3-1
Slicer Installation		3-1
OPERATING INSTRUCTIONS	0908S20025	4-1
TROUBLESHOOTING	0908S20026	5-1
The Machine does not have power		5-1
The Machine does not indicate ñreadyò		5-1
The Machine starts, but blades do not move		5-2
The Error symbol is illuminated		5-2
The Cover Open symbol is illuminated		5-3
The Slicer Damages the bread		5-4
The Slices Vary in thickness		5-5
The Blade Frames are Knocking		5-5
The Slicer Vibrates Excessively		5-5
The Bread is Cutting Slowly		5-5
PLC Inputs and Outputs		5-6
MAINTENANCE & CLEANING	0908S20027	6-1
Raising upper section ñopening the hoodò		6-1
Removing the Side Covers and Upper Rear Cover		6-3
Removing the Hold Down		6-4
Infeed Table Removal		6-6
Outfeed Table Removal		6-7
Outfeed Cover Removal		6-7
Gas Spring Removal and Replacement		6-8
Outfeed Cover Bracket Removal and Replacement		6-8
Removing the Blade Frames		6-9
Replacing the Blade Frames		6-11
Changing the Blades		6-12
Blade Change Indicator		6-13
Replacing and Tightening the Belt		6-14
Adjusting the Blade Frames When Slices Vary in Thickness		6-17
Adjusting the Clearance between the Blade Frames		6-18
Caster Replacement		6-20
Lubrication		6-21
Cleaning		6-21
RECOMMENDED SPARE PARTS	0908S20028	7-1

Continued

INDEX (Continued)

Section Description	Document No.	Page No.
REPLACEMENT PARTS SECTION		
MAIN FRAME & STAND (OR LEGS)	0908S20029	8-1
Model 908 Drawing and Parts List		8-1
Model 918 Drawing and Parts List		8-2
Model 938 Drawing and Parts List		8-3
ROCKER DRIVE (Blade Actuator)	0908S20030	9-1
Drawing and Parts List		9-1
PUSHER DRIVE (Bread Product Actuator)	0908S20031	10-1
Drawing and Parts List		10-1
TOP ASSEMBLY	0908S20032	11-1
Drawing and Parts List		11-1
Bagging Platform (Models 908-N, 918-N)		11-4
BLADE FRAME HARDWARE	0908S20033	12-1
Drawing and Parts List		12-1
COVERS	0908S20034	13-1
Model 908-N Drawing and Parts List		13-1
Model 918-N Drawing and Parts List		13-2
Model 938-N Drawing and Parts List		13-3
SLICE PARTS	0908S20015 & 35	14-1
Drawing and Parts List		14-1
ELECTRICAL	0908S20036	15-1
Drawing and Parts List		15-1
WIRING DIAGRAM 1-60-115	0908S20027	16-1
WARRANTY	GEN 040228	
WARRANTY PROCEDURE	GEN 040226	
RETURNED PARTS POLICY	GEN 040227	

PAGE INTENTIONALLY LEFT BLANK

Oliver Packaging and Equipment Company (800) 253-3893
3236 Wilson DR NW Walker, MI 49534 www.oliverquality.com

908-N, 918-N, 938-N SIMPLE SLICE BREAD SLICERS

SAFETY INSTRUCTIONS

WARNING

ALTHOUGH VARIOUS SAFETY DEVICES AND GUARDS HAVE BEEN PROVIDED ON THESE MACHINES, OPERATORS AND MAINTENANCE PERSONNEL MUST OBSERVE THE FOLLOWING SAFETY PRECAUTIONS.

IMPROPER INSTALLATION, MAINTENANCE, OR OPERATION OF THIS EQUIPMENT COULD CAUSE SERIOUS INJURY OR DEATH.

1. Read this manual before attempting to install or service your machine. Never allow an untrained person to service this machine.
2. Connect the machine to a properly grounded electrical supply that meets the requirements shown on the electrical specification plate and local electrical codes.
3. Disconnect the machine from the electrical supply before cleaning or servicing.
4. Inspect and secure all covers and guards before starting the machine.
5. Observe all caution and warning labels affixed to the machine.
6. Use only proper OEM replacement parts.
7. Do not wear loose fitting clothing or loose hair when operating, cleaning, or servicing this machine.
8. Wear applicable personal protective safety equipment while performing cleaning and maintenance.
9. Keep hands away from the moving parts of this machine while it is in operation.
10. In addition to these general safety instructions, please follow the specific safety instructions as prescribed in the remainder of this manual.
11. This machine contains sharp blades. Keep hands away.
12. This machine has pinch points. Keep hands away.

WARNING

DO NOT USE FOR OTHER THAN ORIGINALLY INTENDED PURPOSE.

Oliver Packaging and Equipment Company (800) 253-3893
3236 Wilson DR NW Walker, MI 49534 www.oliverquality.com

DESCRIPTION and SPECIFICATIONS

Description

The Oliver models 908-N, 918-N, and 938-N bread slicers are based on a compact, sturdy, time tested reciprocating blade design paired with a powered bread pusher. These machines are easy to operate and follow a top to bottom angled bread path. They are capable of slicing either hard crusted breads or soft-textured loaves with ease and precision. After slicing, the bread can be easily packaged with the use of a convenient front mounted bagging platform (908-N, 918-N) or a bagging platform that deploys as the front outfeed cover is opened (938-N). These machines will provide years of efficient and reliable operation requiring little maintenance.

The bread slicers are fabricated from stainless and painted steel construction for easy cleaning and maintenance. As with other Oliver slicers, blade changing is easily done so many operators feel comfortable enough to do it themselves when the need arises, eliminating a service call.

The first two model numbers represent counter top (908-N) and stand-mounted (0918-N) configurations of the machine intended for professional use (ProServe). The third configuration (0938-N) is a self-service version, stand-mounted with a front cover.

Oliver Packaging and Equipment Company, with a history of serving the baking industry for over 70 years, manufactures and supports these slicers.

Specifications

Space Requirements (inches, all dimensions are approximate)
Model 908-N

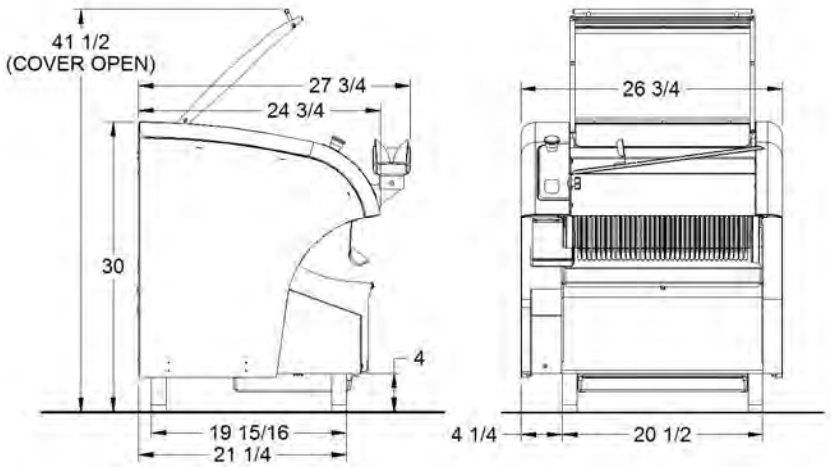

Model 918-N

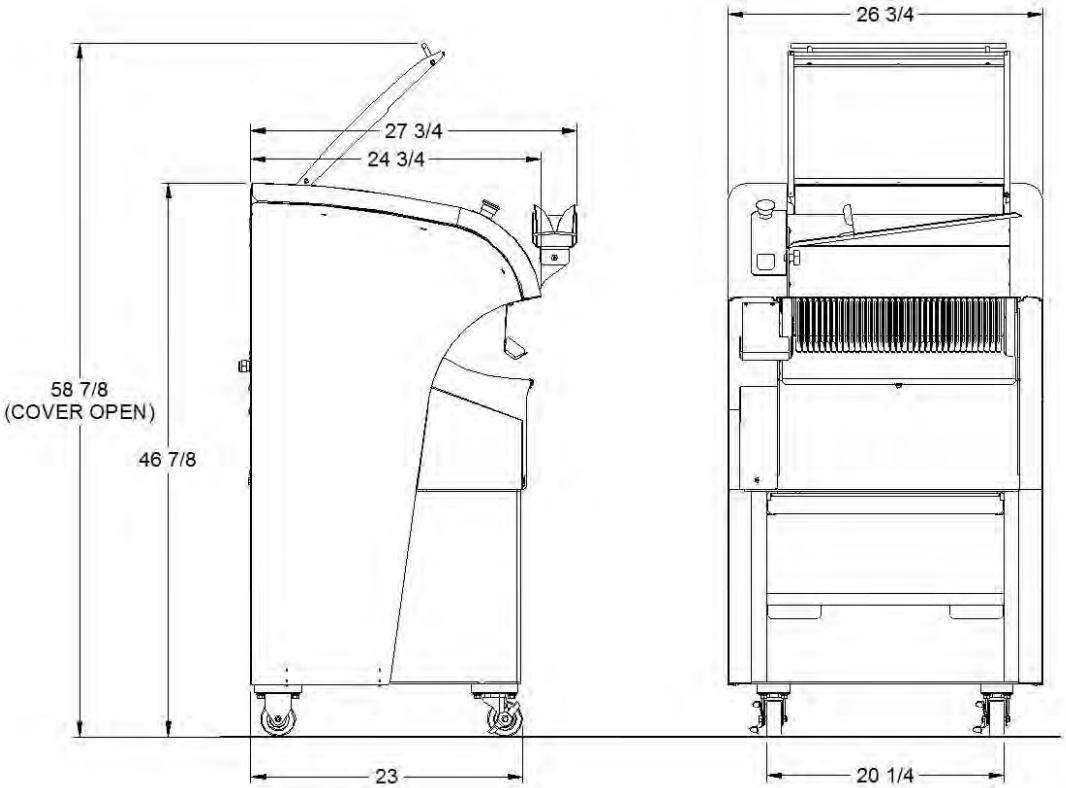

Model 938-N

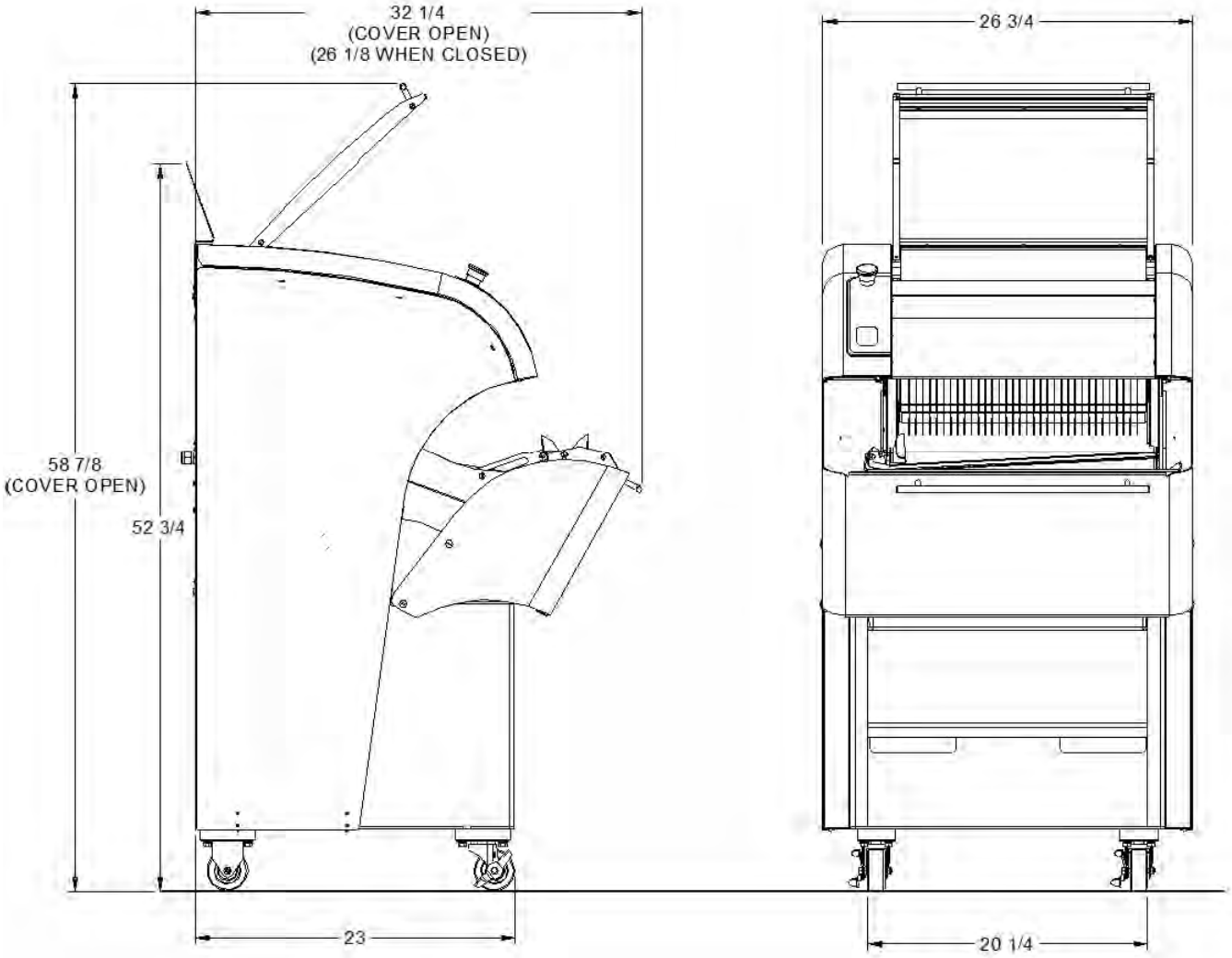
32 1/4
(COVER OPEN)
(26 1/8 WHEN CLOSED)
58 7/8
(COVER OPEN)
52 3/4
23
26 3/4
20 1/4

Product Capacities (all models):

Length	18 Inches
Width	8 3/4 inches (See Note)
Height	5 1/4 inches (See Note)

NOTE

WIDTH AND HEIGHT DIMENSIONS ARE FOR A RECTANGULAR PRODUCT. DIFFERENT SHAPED BREAD PRODUCTS MAY FIT BY CHANGING THE ORIENTATION OF THE LOAF. FOR EXAMPLE, A TALL NARROW LOAF MAY BE SLICED ON ITS SIDE.

Standard Electrical Options: (Others consult factory).

1 phase, 60 hz, 115VAC, 6 Amps.

.*Standard Slice Spacings,*

3/8, 1/2, 5/8, 3/4 (inches)

Shipping Weight

Model 908-N 425 lbs. (approximate)
Models 918-N and 938-N 575 lbs. (approximate, with stand)

Net Weight

Model 908-N 350 lbs. (approximate)
Models 918-N and 938-N 500 lbs. (approximate, with stand)

Machine and Display Panel Overview
918-N (908-N similar, without stand)

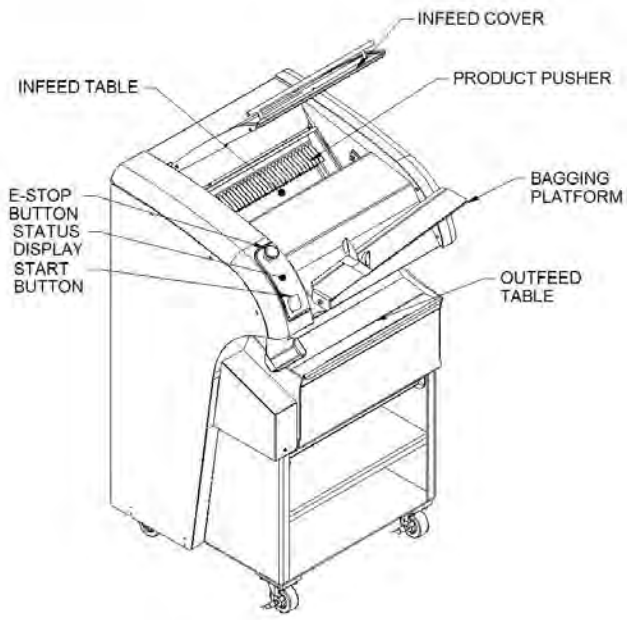

938-N

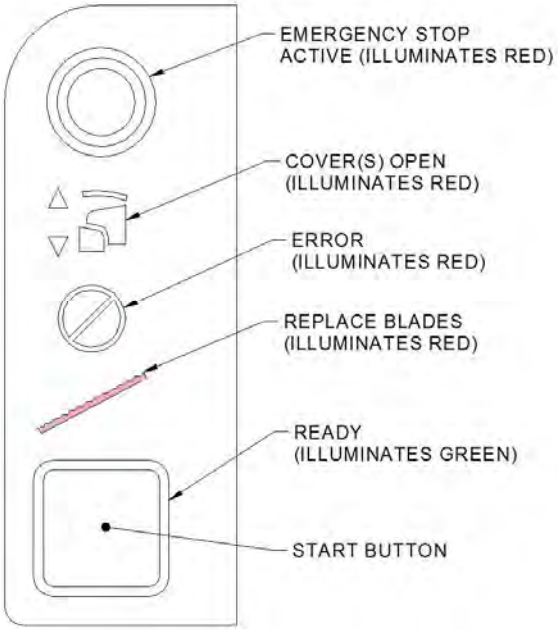

Oliver Packaging and Equipment Company (800) 253-3893
3236 Wilson DR NW Walker, MI 49534 www.oliverquality.com

INSTALLATION INSTRUCTIONS

Slicer Installation:

CAUTION

**THE SLICER IS HEAVY, USE PROPER TECHNIQUE WHEN LIFTING.
KEEP BACK STRAIGHT, KNEES BENT, AND LIFT WITH LEGS.
USE GLOVES TO PROTECT HANDS.**

CAUTION

NEVER LIFT THE SLICER BY THE SIDE COVERS.

FOR STAND MOUNTED SLICERS, USE THE TOP FRONT OF THE STAND AND THE OPENINGS IN THE BACK OF THE STAND TO LIFT THE SLICER.

FOR COUNTER-TOP SLICERS, USE THE BASE PLATE UNDER THE FRONT AND REAR TO LIFT THE SLICER.

Stand Mounted Slicers:

Select a location with a level and solid floor with access to electrical service capable of supplying the rated current for the machine. Avoid placing the machine in an aisle or trafficked area where the bagging platform or outfeed cover maybe encountered by persons or equipment.

Position the machine while it is still in its packaging as close as possible to the desired location. Remove the outer packaging and strapping. Use at least four people or a fork lift (place forks carefully under the stand) lift the slicer from the pallet surface and set the machine onto the floor. Make final location adjustments by rolling the machine to its desired location and lock the front casters.

Counter-Top Slicers:

Select a location for your slicer with a clean, level, and solid counter top capable of handling the weight of the slicer with access to electrical service capable of supplying the rated current for the machine.

Position the machine while it is still in its packaging as close as possible to the desired location. Remove the outer packaging and strapping. It is advisable to place pieces paper or cardboard as slip sheets on the counter surface to temporarily place the slicer on to facilitate sliding the slicer into location, since the rubber feet grip surfaces. Use at least three people to lift the slicer to counter height and slide it into position. Remove the slip sheets after positioning.

908-N, 918-N, 938-N SIMPLE SLICE BREAD SLICERS

OPERATING INSTRUCTIONS

CAUTION- KEEP HANDS CLEAR OF COVER EDGES WHILE CLOSING.

CAUTION- KEEP HANDS CLEAR OF SLICER BLADE EDGES, DO NOT PLACE FINGERS BETWEEN BLADES.

- If the green start light is on, the slicer is ready to operate.
    - If the green start light is not on, close any open covers and release the e-stop button if it has been pressed (twist to release).
    - If the error light is on, refer to trouble-shooting directions (next section).
- Close the lower cover (if equipped--outfeed cover, 938-N only) and open the top cover (infeed cover) and place the bread on the infeed table (Steps 1 and 2 on the diagram).

CAUTION- USE CARE NOT TO SCRAPE HANDS ON PUSHER EDGES IN THE REAR INFEED TABLE AREA. DO NOT REACH BETWEEN THE BLADES BEYOND THE HOLD DOWN.

- Close the top cover and press the green button to start the slicer (Steps 3 and 4 on diagram).

CAUTION- WAIT FOR THE SLICER TO COMPLETELY STOP RUNNING BEFORE REACHING INTO THE SLICER TO AVOID ANY MOVING PART SHARP EDGES OR PINCH POINTS.

- Open the lower cover (if equipped) and remove the sliced loaf from the slicer by grasping the loaf by the ends and place it on the angled bagging platform (See note and Step 5 on diagram).

CAUTION- USE CARE NOT TO SCRAPE HANDS ON THE HOLD DOWN. DO NOT REACH BETWEEN THE BLADES BEYOND THE HOLD DOWN.

- Slide a bread bag over the sliced bread while it is on the platform (Step 6 on diagram).
- Simultaneously pull the bread and bag off from the scoop and close and fasten the bag.

908-N, 918-N, 938-N SIMPLE SLICE BREAD SLICERS

Note: The bagging scoopôs bread stop is adjustable to accommodate various size loaves. To adjust, apply pressure to the outside edges of the bread stop and slide along the scoop to the desired position.

CAUTION, do not put your fingers between the bagging stop ears while squeezing them.

(908-N/ 918-N shown)

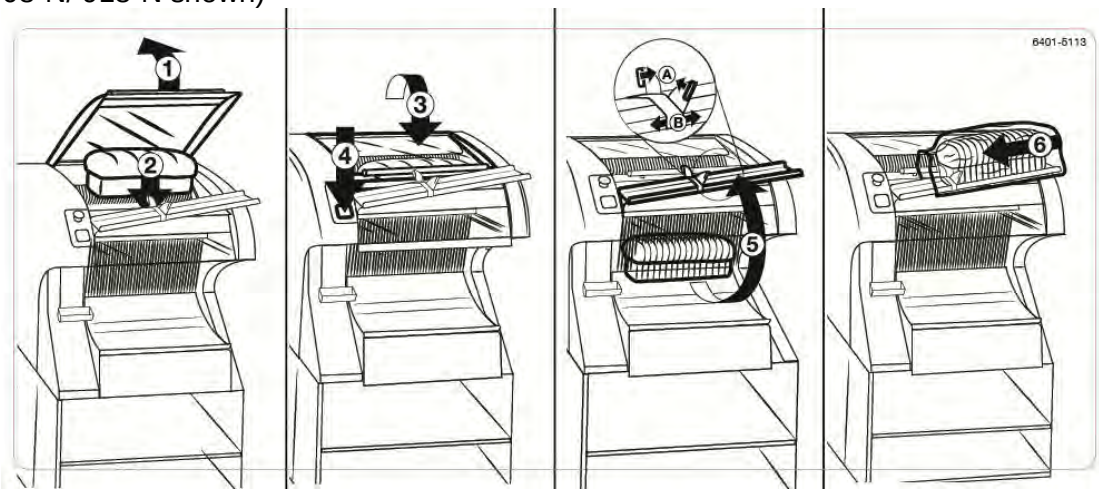

TROUBLE SHOOTING

WARNING

ALWAYS DISCONNECT THE SLICER FROM THE POWER SUPPLY BEFORE ATTEMPTING ANY TYPE OF MAINTENANCE TASK THAT INVOLVES REACHING IN THE MACHINE OR REMOVING COVERS AND GUARDS.

1. The machine does not appear to have electrical power.

1.1. Check by pushing the emergency stop button down, the red light ring around the button should illuminate if the machine has power. (Twist the knob to release the button after checking.)

1.2. Verify that the machine is plugged in.

1.3. Verify there is power at the outlet. (Check by plugging in a small working appliance, like a lamp. Check to see if a circuit breaker has tripped. If the circuit breaker has not tripped and the circuit is still not working, have a qualified electrician check the circuit.)

1.4. If the machine does not respond after the above verification steps, call Oliver service.

2. The machine does not indicate "ready" (the green square around the start button does not illuminate).

2.1. Check the display panel for any illuminated red symbols.

2.1.1. The cover open symbol is illuminated:
Close any open covers and replace any missing guards. See ñCover open symbol is illuminatedò topic.

2.1.2. The Emergency Stop button is pressed down and the ring is illuminated.
Twist the Red button in the direction of the arrow on the button to release it.

2.1.3. The error symbol is illuminated.
See ñerror symbol is illuminatedò topic.

Note: The ñreplace blades symbolò is only a reminder and indicator will not prevent the machine from functioning normally, and will not prevent a ñreadyò status light.

2.2. The machine is out of logic sequence. Reset the machine by pressing and releasing the e-stop button or unplug the machine for 10 or more seconds and plug it back in.

3. The machine attempts to run but the blades do not move and a humming sound is heard.

IMPORTANT! PRESS THE E-STOP BUTTON WITHIN SECONDS, OR THE MOTOR WILL OVERHEAT AND DAMAGE MAY OCCUR.

3.1. The blades may be jammed on a partially cut loaf or foreign object.
Clear the machine by resetting the machine (ref. step 2.2) to get the pusher out of the way, remove power to the machine, and pull the bread out of the blades carefully, avoiding the sharp blade edges. Use a fork or other instrument to distance hands from the sharp blades.

3.2. The blade drive mechanism may be jammed on a buildup of crumbs or foreign material.
Empty the crumb tray and remove the outfeed table and inspect the crumb chute area. Clear any material found.

3.3. The drive system is binding. (Have a qualified service agent check for defective bearings or other restrictions to free movement.)

4. The error symbol is illuminated.

Note: This occurs when the pusher does not complete its full travel (either up or down) within 30 seconds. Also see ñbread is cutting slowlyò topic.

4.1. If the pusher move has timed out because a loaf was difficult to cut and the bread is partially cut and still in the blades:

4.1.1. Reset the machine by pressing and releasing the E-stop. Run the cutting cycle again (push the green button) to clear the partially cut loaf.

If the bread does not clear after repeated attempts to cut it, the loaf may have been too large for the slicer opening, has been incorrectly loaded, or has jammed into one of the blade frames and cannot be cut.

4.1.2. Reset the machine to get the pusher out of the way by pressing and releasing the E-stop.

4.1.3. Remove power to the machine (unplug it).

4.1.4. Pull the bread out of the blades carefully, avoiding the sharp blade edges. Use a fork or other instrument to keep hands away from the sharp blades.

4.1.5. When the obstruction is cleared, plug the machine back in.

4.2. If the pusher move has timed out because the pusher had difficulty moving:

4.2.1. Examine it to determine if any material has jammed under it, behind it, or in the slots along the side walls of the machine. If so, remove the jammed material. If necessary, temporarily remove the pusher by loosening the two hand knobs, clear the obstruction, and replace the pusher.

4.2.2. The drive system is binding. (Have a qualified service agent check for defective bearings or other restrictions to free movement.)

4.3. The pusher move may have timed out because a switch may have been damaged or needs adjustment. (Have a qualified service agent or electrician examine the switches.)

4.4. The pusher move may have timed out because the blades have been damaged or worn and no longer cut efficiently. Replace the blades.

5. The cover open symbol is illuminated.

5.1. The top cover (infeed cover) is not closed.

5.2. The bottom cover (outfeed cover) is not closed (model 938-N only).

5.3. An interlocked guard is removed from the machine, or is not assembled onto the machine correctly.

5.4. The cover(s) appear to be closed, but the light continues to be on.

5.4.1. Debris (bread crumbs etc.) may be preventing a cover from completely closing. Inspect and clean if necessary.

5.4.2. A switch may have been damaged or needs adjustment. (Have a qualified service agent or an electrician examine the switches.)

6. The slicer damages the bread.

6.1. The top crust is ripped.

6.1.1. The loaf maybe too tall and drags on the hold downs or blade frames during cutting. Consider orienting the loaf differently.

6.1.2. The hold downs may be coated with residue and drag on the loaf. Clean the hold downs and blades (See ñCleaning and Maintenanceò section of this manual).

6.1.3. The hold downs may be bent or jammed with bread material, preventing them from pivoting upwards freely. Inspect, straighten and clean as necessary (See ñCleaning and Maintenanceò section of this manual).

6.1.4. The hold downs drag on the loaf during removal. Consider using a pivoting backwards rolling motion while removing the loaf to minimize the amount or rubbing the top of the loaf does on the hold downs.

6.2. The bread rips apart when pulling it out of the slicer.

6.2.1. The loaf is not completely cut through.

6.2.1.1. The slicer may have timed out (see ñerror symbol is illuminatedò topic).

6.2.1.2. The loaf is too warm or soft and has been crushed and wrapped over the top of the pusher resulting in the back top corner from being fully pushed through the blades. Consider allowing the bread to cool and/or orienting the loaf differently.

6.2.2. The loaf is too large or tall and drags on the hold downs. Consider orienting the loaf differently.

6.2.3. The hold downs drag on the loaf during removal. Consider using a pivoting backwards rolling motion while removing the loaf to minimize the amount or rubbing the top of the loaf does on the hold downs.

6.3. The product being sliced is below the minimum height capacity of the machine and is getting pinched under the pusher.

6.4. The loaf is crushed by the pusher.

6.4.1. The bread maybe too soft and warm. Consider allowing it too cool before slicing.

6.4.2. The bread maybe too large or tall for the slicer opening. Consider orienting the loaf differently.

6.4.3. Verify the hold down is free to pivot upwards and can fall back down freely by lifting it from the front (outfeed) side of the slicer and releasing it. If not it does not move freely it may be bent or contaminated. Straighten or clean as necessary (See ñCleaning and Maintenanceò section of this manual).

7. Bread slices vary in thickness.

The blade frames are out of adjustment. (See the ñMaintenanceò section of this manual under ñAdjusting the Blade Frames When Slices Vary in Thicknessò on how to correct this problem.)

8. The blade frames are knocking.

The blade frames are out of adjustment. (See the ñMaintenanceò section of this manual under ñAdjusting the Clearance between the Blade Framesò on how to perform this adjustment.)

9. The slicer vibrates excessively.

9.1. The blades may be coated with residue causing the loaf to stick to the blades. Clean or replace the blades.

9.2. The drive belt is loose or worn. (See the ñMaintenanceò section of this manual).

9.3. One or more of the bearings on the machine are failing. (Have a qualified service agent check for defective bearings and replace them as required.)

9.4. The pins, (four eccentrics and four regular), and links at the top of the blade frames are worn. (See the ñMaintenanceò section of this manual).

10. The bread is cutting slowly.

Also see ñthe error symbol is illuminatedò topic.

10.1. If only certain products are cutting slowly, the cutting speed may be normal for those particular products. The bread may have an unusually high density, hard crust, or weight that causes the slow cutting and may result in a time-out error.

10.2. The knives of the machine have become worn, (dull) or coated with sugar, raisins, or other contaminants. (See the ñMaintenanceò section of this manual under ñChanging the Cutting Knivesò). Many owners can perform this item of maintenance without calling a service company.

10.3. The blades are not aligned properly. (See the ñMaintenanceò section of this manual under ñAdjusting the Clearance between the Blade Framesò on how to perform this adjustment.)

10.4. The pusher force may be too low and needs to be adjusted.

10.5. The bread is jammed (loaf is too large, or not loaded properly).

10.6. The pusher guide slides are contaminated and prevent it from moving smoothly and evenly. (Clean and re-lube the slides).

PLC INPUTS AND OUTPUTSð Helpful for trouble shooting potential electrical issues.

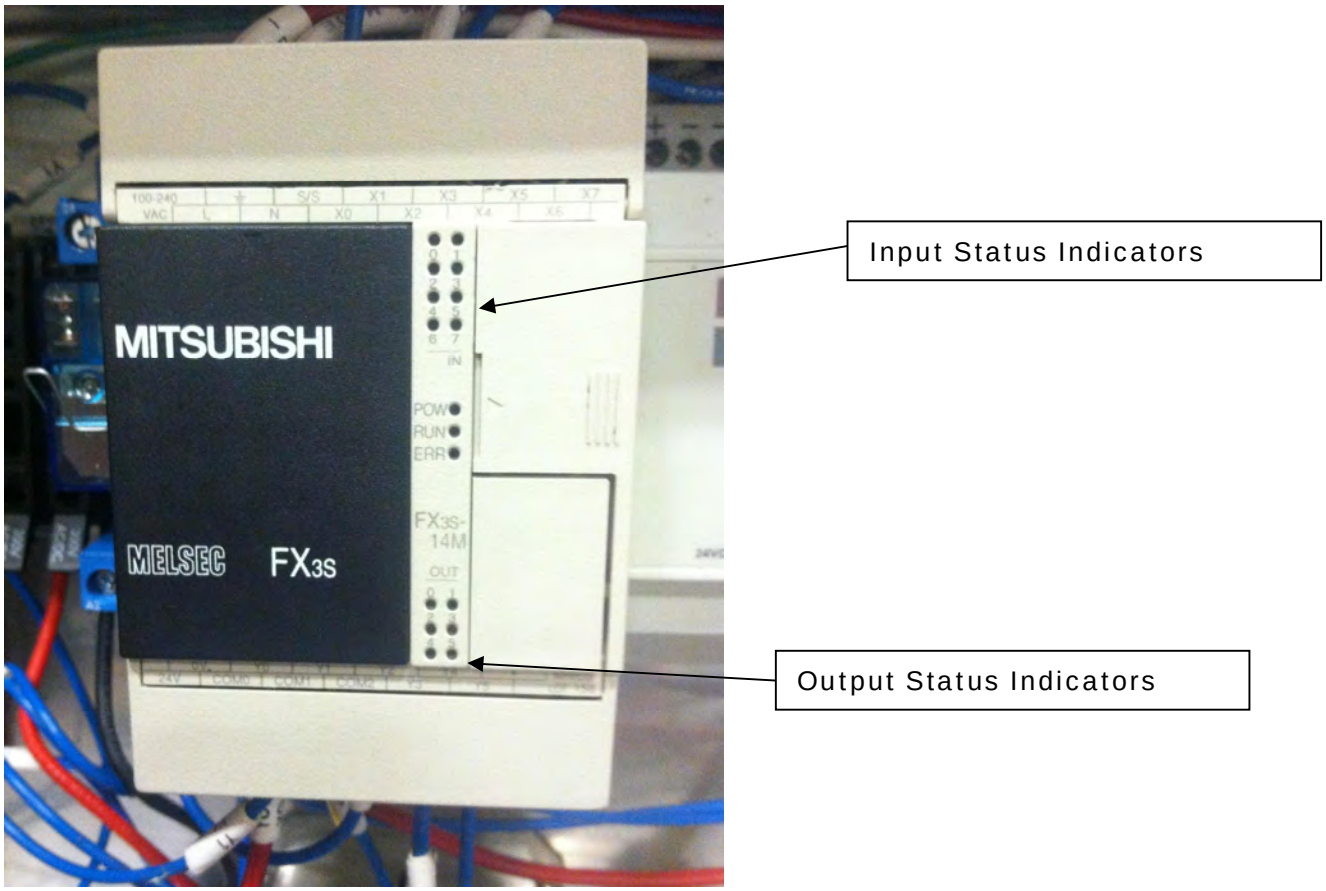

Input List

1. Input 0: (Top row left indicator) ñStartòbutton switch depressed.
2. Input 1: (Top row right indicator) ñE-stopòbutton is up (ready to run).
3. Input 2: (2nd row left indicator) Pusher is back (home position).
4. Input 3: (2nd row right indicator) Pusher is forward (through the blades position).
5. Input 4: (3rd row left indicator) Covers are closed (ready to run).
6. Input 5: (3rd row right indicator) Not Used.
7. Input 6: (4th row left indicator) Not Used.
8. Input 7: (4th row right indicator) Used for testing only (continuous run mode).

Output List

1. Output 0: (Top row left indicator) Run Blade Motor.
2. Output 1: (Top row right indicator) Run Pusher Motor.
3. Output 2: (2nd row left indicator) Pusher in blades direction.
4. Output 3: (2nd row right indicator) Start Light
5. Output 4: (3rd row left indicator) Error Indicator.
6. Output 5: (3rd row right indicator) Replace Blades Indicator.

MAINTENANCE

WARNING

ALWAYS UNPLUG THE SLICER BEFORE PERFORMING ANY TYPE OF MAINTENANCE AND CLEANING TASK REPLACE ALL GUARDS AND COVERS BEFORE RECONNECTING TO POWER

Top assembly openingð necessary for periodic cleaning and for maintenance including blade changing.

Figure 7-1 Top shown in open (raised) position.

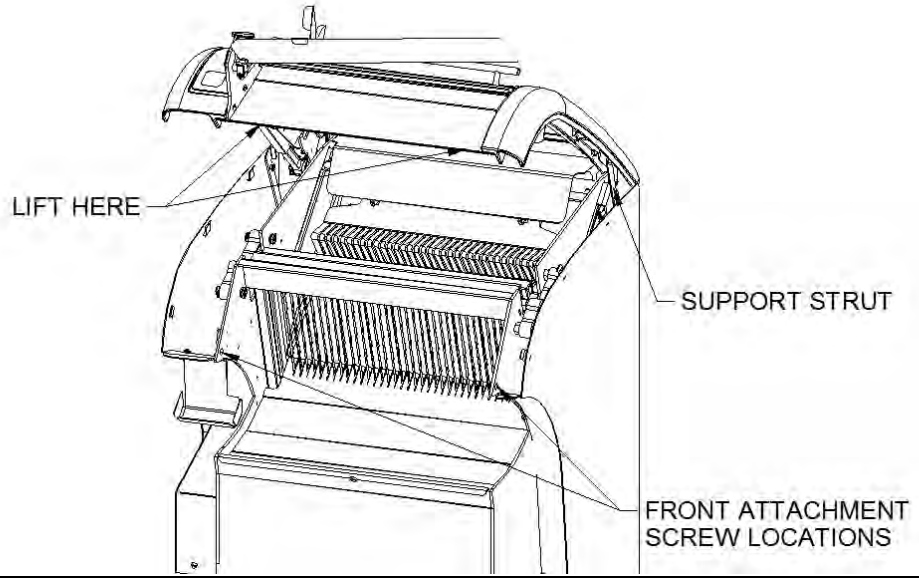

To open the top assembly---

1. Loosen and remove the front attachment screws located under the clear plastic shield at the front of the machine. (Requires a straight bladed screw driver).
2. Grasp the front edge of the clear plastic cover at each end and lift until the support strut straightens. Lower slightly and verify the support strut locks to support the top before releasing it.

CAUTION: THE SUPPORT STRUT SHOULD BE BENT IN THE MIDDLE SLIGHTLY FORWARD AND DOWNWARD WHEN IN THE LOCKED POSITION.

SEE FIGURE 7-2 ON THE NEXT PAGE.

Figure 7-2 Strut in supporting (locked) position, side cover removed.

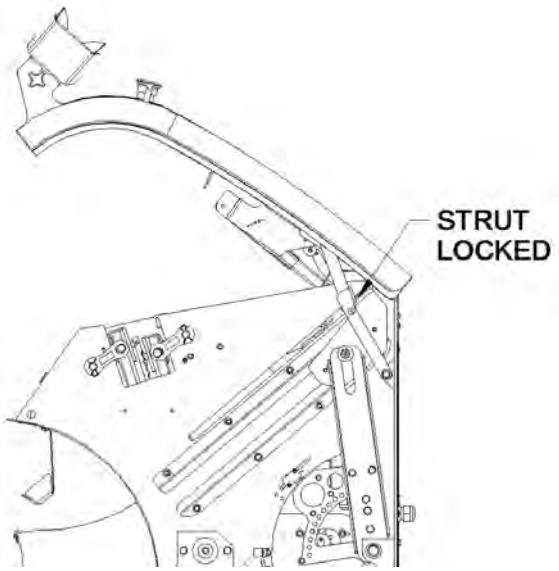

To close the top assembly---
Push the support strut joint back while supporting the top assembly as follows:

With your left hand lift the top assembly on the right side while simultaneously pushing back on the mid joint of the support strut. Lower the top assembly while allowing the support to buckle back.

CAUTION: PINCH POINTS ALONG THE SIDES AND FRONT CORNERSð KEEP HANDS CLEAR WHILE LOWERING THE TOP.

WARNING

ALWAYS UNPLUG THE SLICER BEFORE PERFORMING ANY TYPE OF MAINTENANCE AND CLEANING TASK
REPLACE ALL GUARDS AND COVERS BEFORE RECONNECTING TO POWER

Side cover removalð Necessary to gain access to the blade drive belt on the left side and the pusher drive on right for maintenance and cleaning.

1. Open the top assembly and verify the strut is safely in position.
2. Loosen (but do not remove) the two slotted screws on the top corners on the back of the machine (see figure 7-3).
3. Hold each side panel along the top edge, pull outwards and lift to remove.

Reverse the above procedure to replace the side covers.

Figure 7-3 Side panel and upper rear cover removal

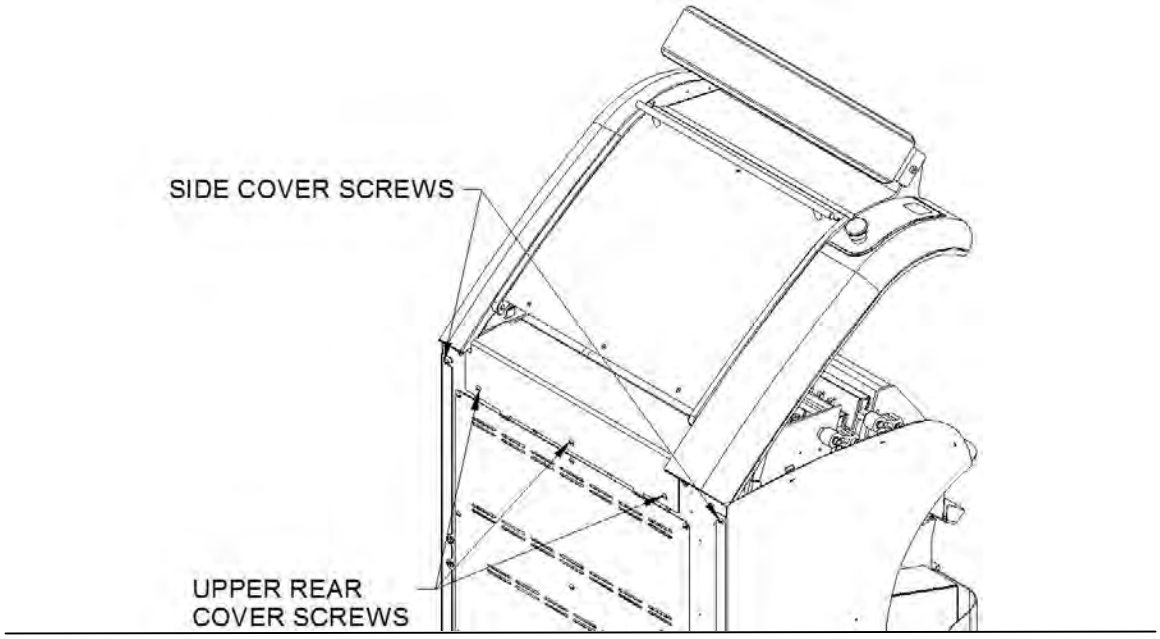

Upper Rear Cover Removal---Necessary to provide clearance to remove the infeed table panel to provide access to the rear blade frame for maintenance and cleaning.

Note: The top assembly may be opened or closed to remove this cover.

1. Remove the three slotted screws on the back of the machine (see figure 7-3).
2. Remove the cover by pulling it outward and upward.

Reverse the above procedure to replace the upper rear cover. When replacing, align the tabs in the slots and push in horizontally to close the internal interlock switch.

Single Piece Hold down removal--- This style hold down uses a single plate that is spring loaded. Note: see the next section for the alternate multi-piece hold down.

WARNING

Use care while working around the sharp sides of the blades. Only test the hold down pivot action by lifting the hold down at the bottom from the front of the machine (from the dull side (outfeed side) of the blades), as pivoting the plate exposes the sharp blade tips on the back side. Do **not** push or pivot the hold down from the rear.

1. Open the top assembly and make sure the strut is safely in position (see topic)
2. Remove the two pivot screws with a flat bladed screw driver and disconnect the torsion springs from the hold down plate (pry spring end free with screw driver or manipulate with needle nose pliers).
3. Pull out the hold down plate in an upward and rearward motion.

Figure 7-4a Single Piece Style Hold down removal

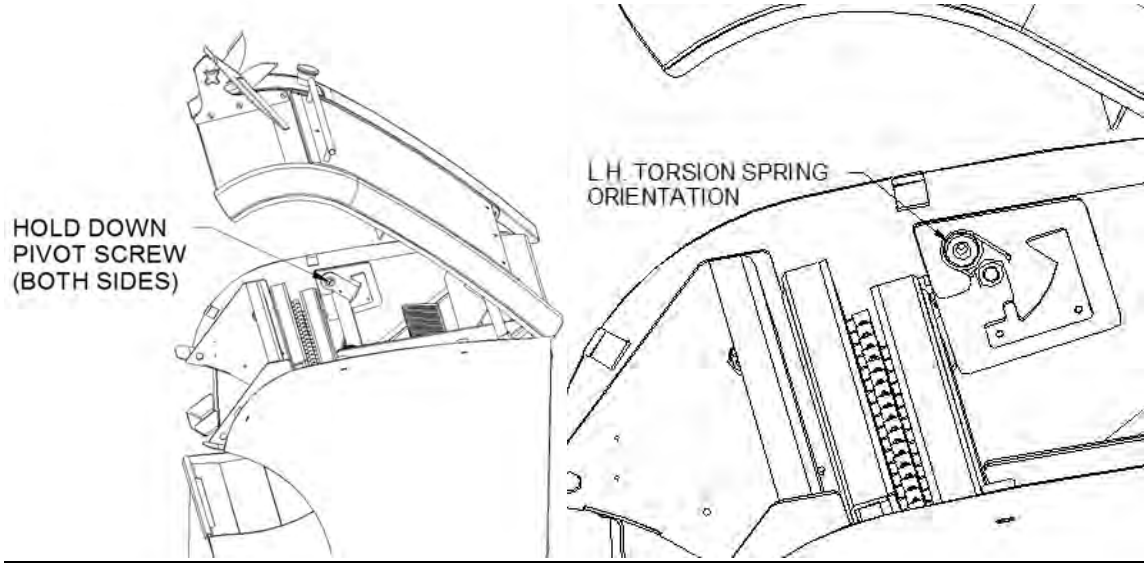

To replace the hold down, reverse the above procedure.

Multi-Piece Hold down removal (Alternate Construction)--- This style hold down has individual feet that hold the bread slices together near the blades after cutting.

CAUTION- THE HOLD DOWN ASSEMBLY HAS PIVOTING JOINTS THAT MAY PINCH IF THE ASSEMBLY IS HELD WRONG WHILE MOVING AND MANIPULATING IT.

1. Open the top assembly and make sure the strut is safely in position (see topic)
2. Remove the individual hold down feet by pivoting up each hold down from the outfeed side, pushing it back, and unhooking it from the support bracket rod.
3. Remove four fasteners, 2 per side (acorn nuts, 3/8 wrench required, see figure 7-4).
4. Remove the hold down bracket by pivoting the bracket up at the rear and out rearwards, then lift it out of the machine.

Figure 7-4b Multi-piece Hold down removal

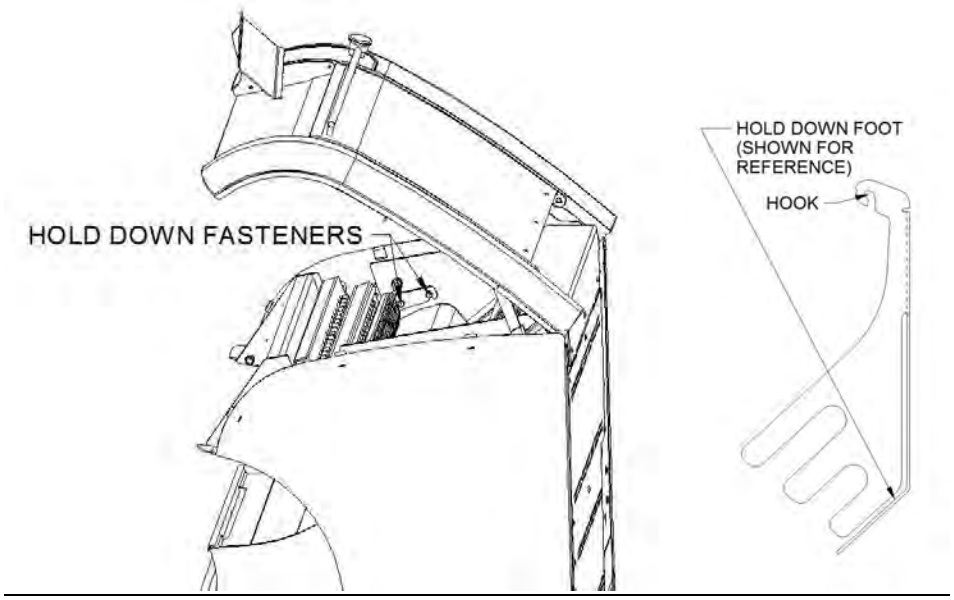

To replace the hold down, reverse the above procedure. Use care while working the hold down feet through the blades. Work from the outfeed side to re-hook the feet. Make sure the left hand and right hand feet flange bends are oriented to the nearest side of the slicer.

WARNING

BLADES ARE EXTREMELY SHARP ALWAYS USE CARE WHEN WORKING IN THE PROXIMITY OF THE EDGES OF THE BLADES.

WARNING

ALWAYS UNPLUG THE SLICER BEFORE PERFORMING ANY TYPE OF MAINTENANCE AND CLEANING TASK REPLACE ALL GUARDS AND COVERS BEFORE RECONNECTING TO POWER

Figure 7-5 Infeed and outfeed table removal:

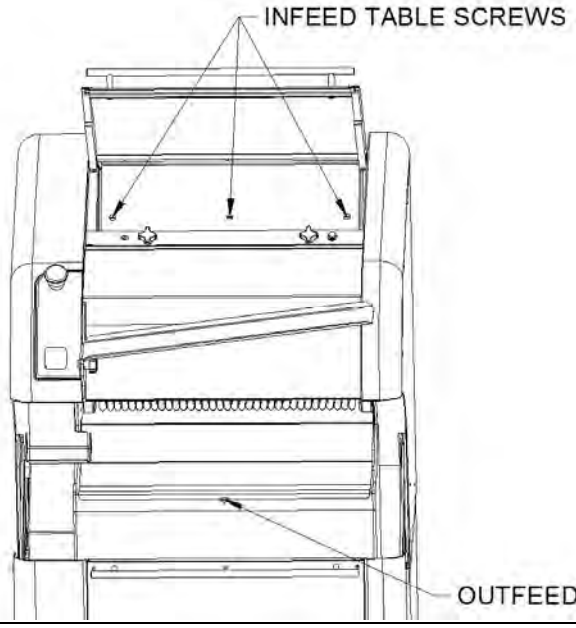

Infeed table removal---Necessary to provide access to blade frames for cleaning and maintenance.

Note: perform the following steps with the ***top assembly down***.

1. Run the slicer and stop it with the e-stop so the pusher is below the infeed table screws. Disconnect power. (Note: the pusher maybe pulled down firmly but gently as an alternative method to access the screws with the power disconnected).
2. Remove the upper rear cover (see topic).
3. Raise the infeed cover and remove the three infeed table slotted screws.
4. Slide the infeed table out the rear of the machine on an angle.

To replace the infeed table, reverse the above procedure. Insert the edge of the outfeed table in between the bottom of the infeed table and the clamping bracket welded its bottom.

Outfeed table removal---Necessary to provide access to blade frames for cleaning and maintenance.

1. Remove the outfeed table slotted screw located on the front edge of the outfeed table in the center of the front of the slicer (908-N and 918-N only, 938-N does not have a mounting screw).
2. Raise the front edge of the outfeed table up and over the front frame plate (908-N and 918-N) or corner mounting brackets (938-N) and slide it out the front of the slicer.

To replace the outfeed table, reverse the above procedure. Insert the edge of the outfeed table in between the bottom of the infeed table and the clamping bracket welded to its bottom front edge, immediately behind the row of blades.

Outfeed cover removal (MODEL 938-N ONLY) ï Necessary when replacing the blade drive belt. (Can be done with the side covers on or off).

1. Open the outfeed cover and disconnect the inner cover table from the outfeed cover by removing the two slotted screws. Slide the inner cover table into the slicer.
2. Close and then remove the outfeed cover by removing the four slotted screws that attach it to the pivot plates while supporting the cover to keep it from falling.

Figure 7-6 Outfeed cover removal

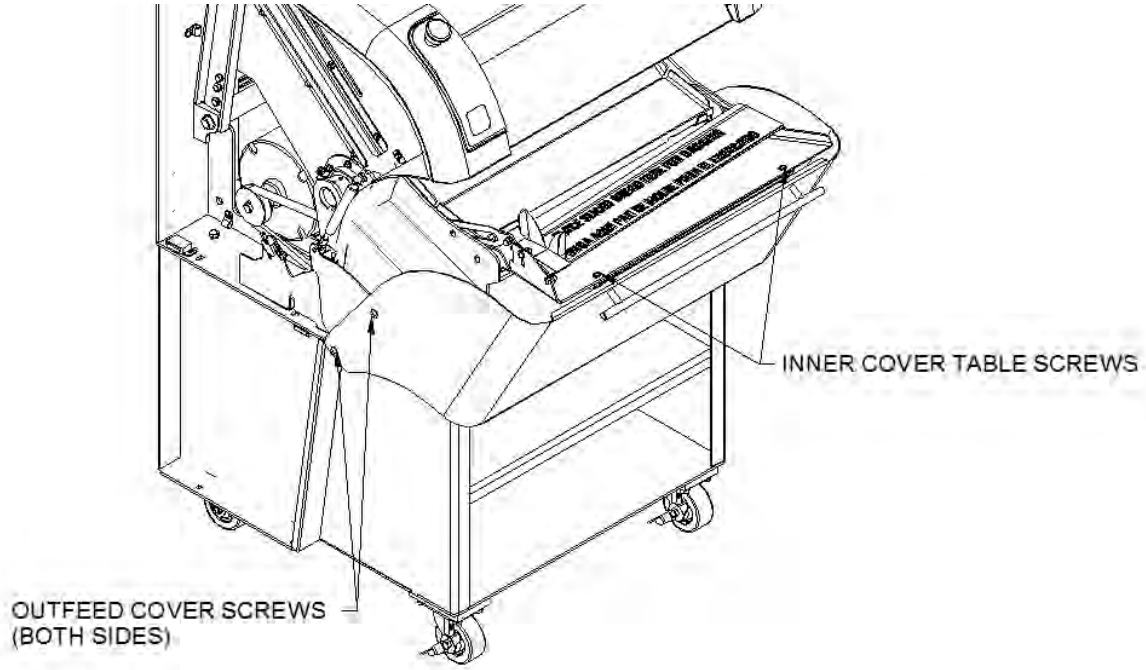

WARNING

ALWAYS UNPLUG THE SLICER BEFORE PERFORMING ANY TYPE OF MAINTENANCE AND CLEANING TASK REPLACE ALL GUARDS AND COVERS BEFORE RECONNECTING TO POWER

Outfeed cover gas spring removal or replacement (MODEL 938-N ONLY) ð
Note: the gas springs are most easily removed and replaced with the outfeed cover on.

1. Access the gas springs by removing the side covers (see topic).
2. Close the outfeed cover to extend the gas springs.
3. Use a large or medium sized flat screw driver to lever the end sockets off the ball mounts and remove.
4. To replace or reinstall:
   4.1. Hold the outfeed cover closed.
   4.2. Orient the gas spring with the large diameter (cylinder) up and rod (small diameter) down.
   4.3. Press the sockets over the ball mounts by hand until they snap into place.

(Note: keeper clips or wires are not used for this gas spring mounting application.)

Figure 7-7 Gas spring and outfeed cover bracket location

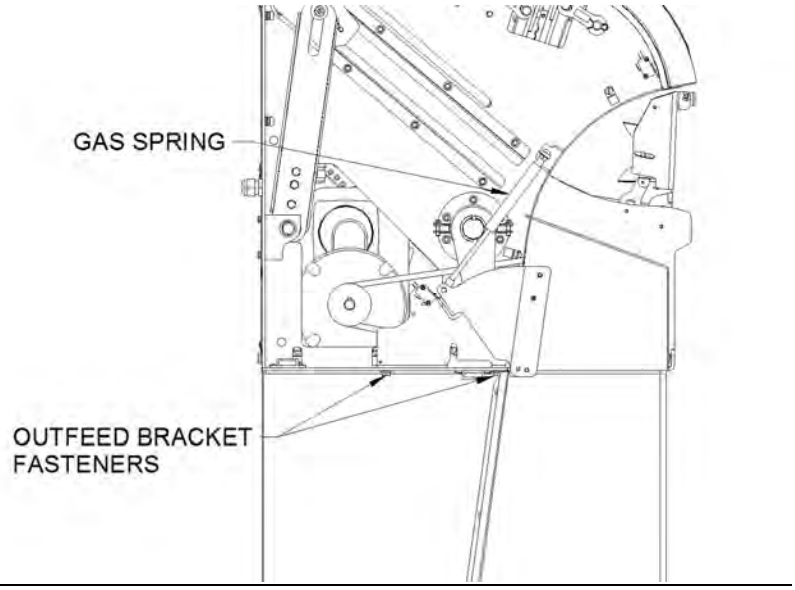

Outfeed bracket removal (MODEL 938-N ONLY)ð Left side bracket removal is necessary for replacing the blade drive belt.

1. Remove the left side cover (see topic).
2. Remove the gas spring (see topic).
3. Remove the outfeed cover (see topic).
4. Remove the outfeed bracket fasteners (7/16 wrench required).
5. Reposition the bracket to allow access to the blade drive flywheel and connector link.
6. Reverse above steps to re-assemble. Note: Leave the outfeed bracket fasteners loose until the outfeed cover is re-assembled to assist with alignment of the parts, then complete tightening the outfeed bracket bolts.

Blade frame removal--- Removal of the rear blade frame is necessary to access the blades for replacement. Both blade frames may be removed for cleaning or maintenance.

1. Remove the upper rear cover (see topic).
2. Remove the in-feed table (see topic).
3. Open the top assembly and make sure the strut is safely in position (see topic).
4. Remove the side panels (see topic).
5. Remove the hold down assembly (see topic).
6. Remove the outfeed table (see topic).
7. Remove the hair pin clips from the eccentric pins and slide the connecting links off on both sides (for blade change only procedures, only remove the rear links).

Figure 7-8 Clip and link removal:

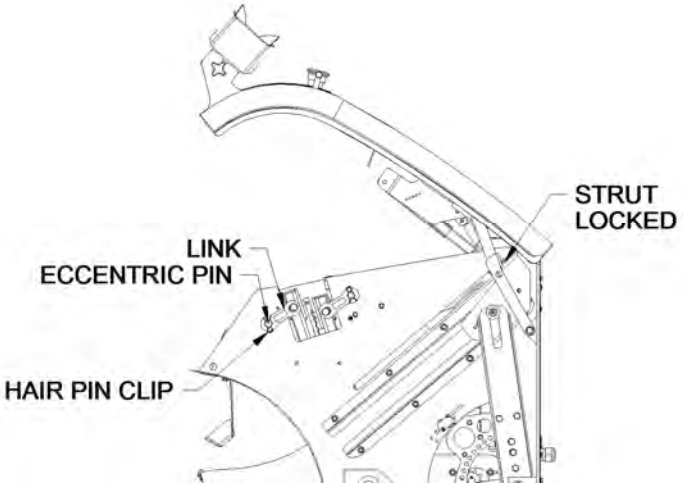

Note: DO NOT LOOSEN THE NUTS WHICH SECURE THE ECCENTRIC PINS UNLESS BLADE FRAME POSITIONS NEED ADJUSTMENT.

WARNING

ALWAYS UNPLUG THE SLICER BEFORE PERFORMING ANY TYPE OF MAINTENANCE AND CLEANING TASK
REPLACE ALL GUARDS AND COVERS BEFORE RECONNECTING TO POWER

WARNING

BLADES ARE EXTREMELY SHARP. ALWAYS USE CARE WHEN WORKING AROUND THE SHARP EDGES OF THE BLADES.

For protection, wear cut resistant gloves and/or find a piece of card board and place over the blades tips while working on the sharp side of the blade frames.

8. Remove the pair of rear locking cams by pivoting the handles upwards.
9. Remove the rear pair of eye bolts and Belleville washers (twist the eye bolts counter clockwise to remove).

Figure 7-9 Locking blade frame cam (rear left shown):

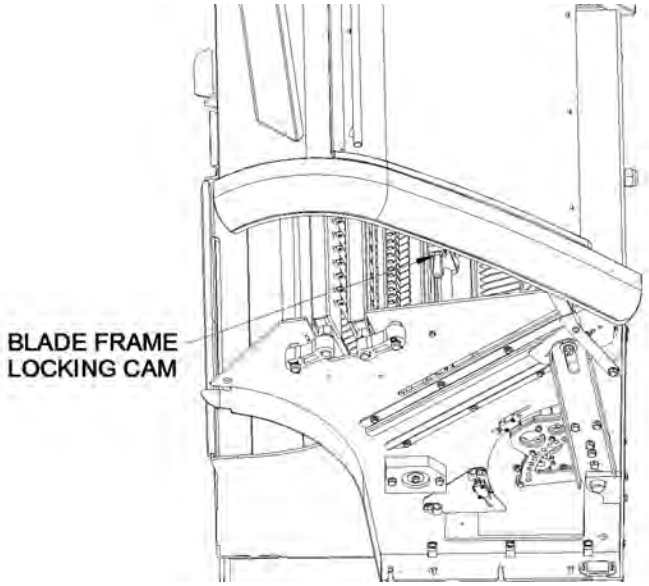

10. Carefully lift the rear blade frame up and out of the slicer.
11. If both blade frames are to be removed, repeat steps 7-10 for the front blade frame.

WARNING

**ALWAYS UNPLUG THE SLICER BEFORE PERFORMING
ANY TYPE OF MAINTENANCE AND CLEANING TASK
REPLACE ALL GUARDS AND COVERS BEFORE RECONNECTING TO POWER**

WARNING

BLADES ARE EXTREMELY SHARP. ALWAYS USE CARE WHEN WORKING AROUND THE SHARP EDGES OF THE BLADES.

CAUTION- USE CARE WHEN RE-ASSEMBLING AND LOCKING BLADE FRAMES TO AVOID PINCH POINTS BETWEEN PARTS AND CAMS.

Reinstalling the Blade Frames

Reinstallation of the blade frames is done by reversing the removal procedures.

Ensure that the feet of the blade frames rest firmly on the swing shafts and that you have included the Belleville washers with the eye bolts.

Note: WHEN INSTALLING THE BELLEVILLE WASHERS, THEY MUST BE PLACED SO THAT THE CROWN IS UP AS SHOWN IN THE ILLUSTRATION BELOW.

Figure 7-10 Belleville washer orientation:

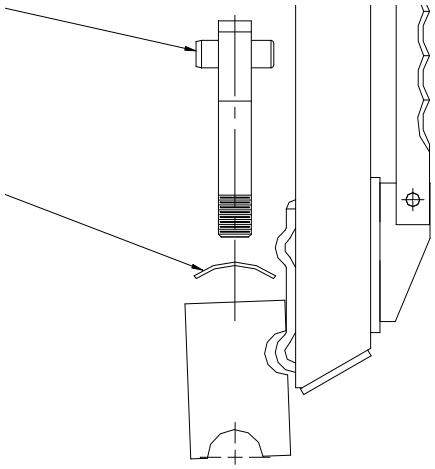

When replacing the eye bolts turn them clockwise until moderate pressure is required to close the cam. If the cam is to easy to close rotate the eye bolt a half turn more in the clockwise direction and try to reinstall the cam. Repeat these partial rotations until moderate pressure is required to close the cam. If the cams are either difficult or impossible to close, rotate the eye bolt a half turn in the counter clockwise direction. Repeating until the cams can be closed using moderate pressure.

WARNING

ALWAYS UNPLUG THE SLICER BEFORE PERFORMING ANY TYPE OF MAINTENANCE AND CLEANING TASK REPLACE ALL GUARDS AND COVERS BEFORE RECONNECTING TO POWER

Changing the Blades

WARNING

BLADES ARE EXTREMELY SHARP. ALWAYS HANDLE WITH CARE.
Note: WHEN REPLACING ALL THE BLADES, ALWAYS REMOVE AND REPLACE ONE BLADE AT A TIME. NEVER REMOVE ALL THE BLADES AT ONCE AND THEN ATTEMPT TO REPLACE THEM ALL AT ONCE.

CAUTION

NEVER PUT BLADE FRAMES IN THE SLICER WITHOUT KNIVES.

1. Remove the rear blade frame from the machine, see ïBlade frame removalò topic.
2. Decrease the pressure on a blade by lifting up on the upper blade pin as shown. Special knife tools shown in the illustrations on the next pages are available to make the task easier, or use a common set of pliers.
3. While the tension is reduced on the blade, carefully remove it.

   Reminder-- The front blade frame blades can be replaced in the machine, there is no need to remove it unless it will be replaced.

Figure 7-11 Blade Removal

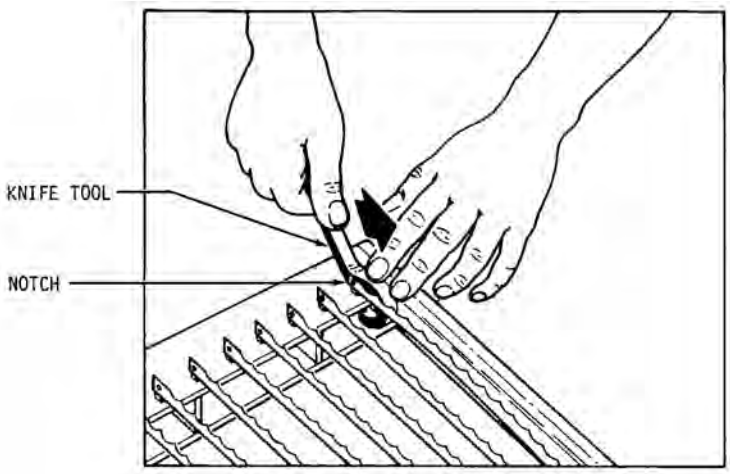

4. The new knife can be installed in the upper blade frame by reversing the removal procedure. A paper clip can be used to hold the knife in position on the lower pin to ease installation. See the illustration below. Remember to make sure that the sharp edge of the blade is pointing in the same direction as the edge on the blade which was just removed. Also remember to remove and replace one blade at a time.

Figure 7-12 Blade Replacement

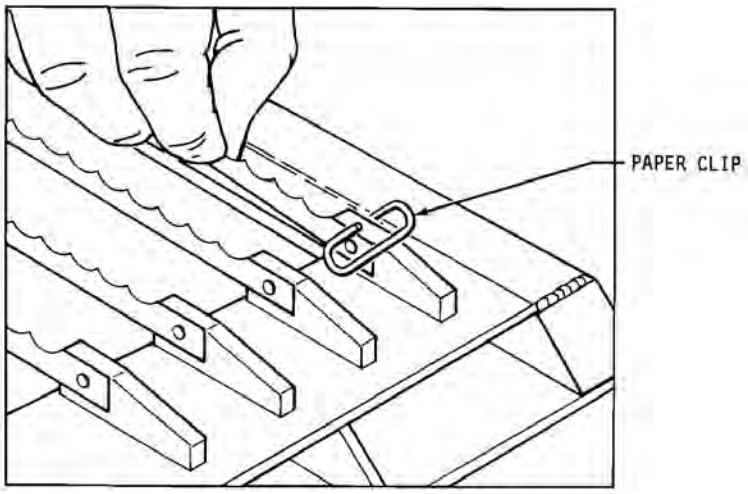

Resetting the Blade Life Counter

After the blades have been replaced and the blade frames are re-installed and covers replaced, reset the blade life counter by:

1. Depress the e-stop.
2. Close the door(s) (the door open indicator must not be illuminated).
3. Hold the green start button down for over 10 seconds until it comes on.

WARNING

ALWAYS UNPLUG THE SLICER BEFORE PERFORMING ANY TYPE OF MAINTENANCE AND CLEANING TASK
REPLACE ALL GUARDS AND COVERS BEFORE RECONNECTING TO POWER

Replacing and Tightening the Belt

CAUTION

OVER-TIGHTENING THE DRIVE BELT MAY CAUSE BEARING OR MOTOR FAILURE.

1. Remove the side covers (see topic)
2. Remove the crumb tray.
3. Loosen, but do not remove, the 4 motor nuts under the slicer and belt tightener bolt on the rear of the slicer and slide the motor forward to loosen the belt.

Figure 7-13 Loosening the Blade Drive Belt

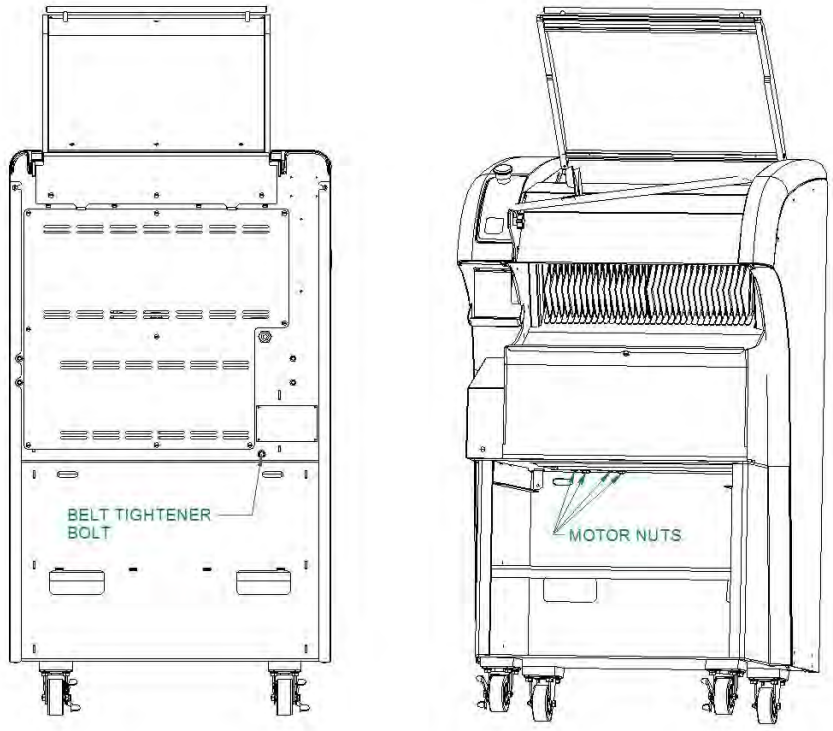

NOTE: DO NOT REMOVE THE MOTOR PLATE NUTS COMPLETELY.

NOTE: OMIT STEPS 4 - 9 IF NOT REPLACING THE BELT.

4. Remove the outfeed cover and the cover pivot mount (left side only, see topics).
5. Remove the belt guard by removing the slotted screw fastener on the front and pulling the guard forward to pull the tab out of the slot.

Figure 7-14 Belt Guard

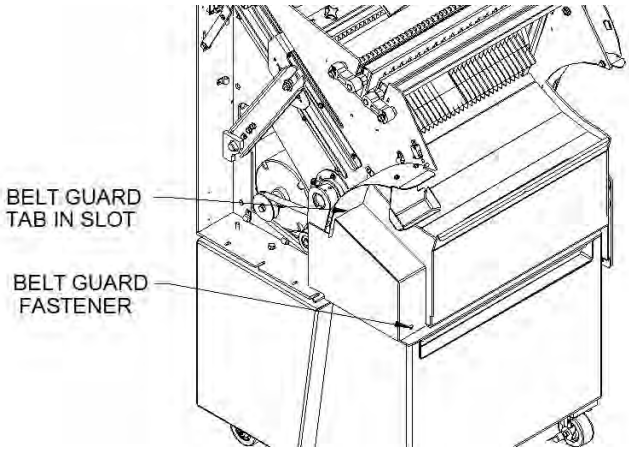

6. Disconnect the rocker lever from the link by loosening the nut on the back of the link pin and pivoting the link down.

Figure 7-15 Rocker Lever and Link

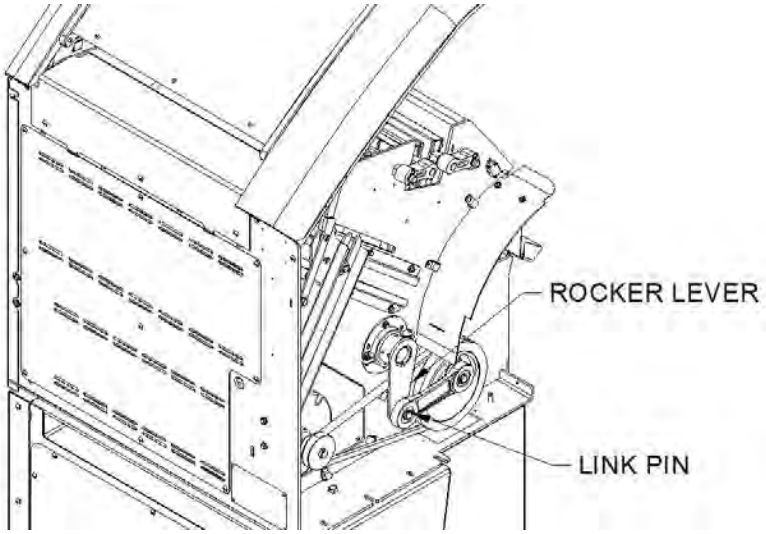

WARNING

ALWAYS UNPLUG THE SLICER BEFORE PERFORMING ANY TYPE OF MAINTENANCE AND CLEANING TASK
REPLACE ALL GUARDS AND COVERS BEFORE RECONNECTING TO POWER

7. Remove and replace the belt.
8. Reconnect the rocker lever and re-tighten the nut.
9. Replace and secure the belt guard.

10. Use the belt tightening bolt to move the motor back.
    The drive belt should be just tight enough, using moderate finger pressure, to allow a 3/8 inch deflection halfway between the motor drive pulley and the driven pulley.
11. When desired belt tension is achieved, retighten the motor mounting nuts securely.
12. Replace the outfeed pivot mount and cover (if equipped, 938-N only).
13. Replace the side cover brackets and covers to return the slicer to working order.

Adjusting blade frames laterally to equalize blade spaces

1. Remove the upper rear cover (see topic).
2. Remove the in-feed table (see topic).
3. Open the top assembly and make sure the strut is safely in position (see topic).
4. Remove the side panels (see topic).
5. Remove the hold down assembly (see topic).
6. Remove the outfeed table (see topic).
7. Measure the gaps between the side panels and each blade frame to determine the course of action. Center the rear blade frame in the machine before adjusting the front blade frame position to make the spaces uniform.
8. On the blade frame to be adjusted, release both locking cams, and also loosen the set screw securing the ñLocking Collarò
9. Use a small hammer or mallet and tap the blade frame either to the right or left to center the blade frame and/or equalize the distances between the blades.
10. Secure the locking collar with the set screw and retighten the locking cams.
11. Reverse steps 6 through 1 to return the slicer to working order.

Figure 7-16 Lateral Blade Frame Adjustment

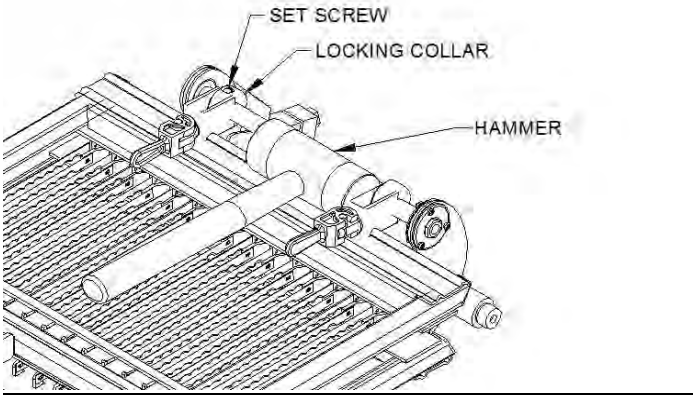

WARNING

ALWAYS UNPLUG THE SLICER BEFORE PERFORMING ANY TYPE OF MAINTENANCE AND CLEANING TASK
REPLACE ALL GUARDS AND COVERS BEFORE RECONNECTING TO POWER

Adjusting the Clearance between the Blade Frames

1. Open the top assembly and make sure the strut is safely in position (see topic).
2. Remove the side panels (see topic).
3. Turn the slicer motor over by hand and observe the behavior of the blade frames to determine a course of action for adjustments. The blade frames should appear centered in the side plate cutouts when they are at mid stroke (the tops of the blades are even with each other). This position is also the location the blade frames are the closest to each other and the best place to do adjustments.
4. The distance between the tops of the blade frames is adjusted by rotating the eccentric pins at the ends of the blade frames. Two wrenches are used: one wrench is used to keep the eccentric pin from rotating while the second is used to loosen the lock nut on the end of the pin. This nut secures the pin in position once its proper location is determined.

Figure 7-17 Blade Frame Clearance Adjustment

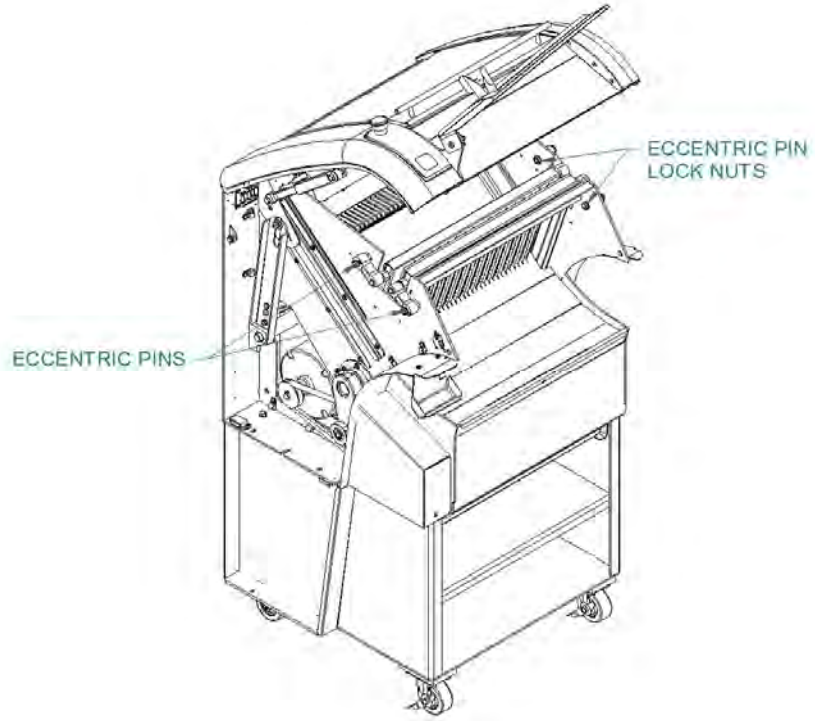

5. To adjust the eccentrics (with the lock nuts loosened), rotate the pins (it is possible that both pins will need adjustment at the same time), until the blade frames appear centered in the opening in the side plate and the knives of the machine are in line (alternating blades should not appear to be in front of or behind each other when viewed from the side). A straight edge may be used from the dull side of the knives to aid in determining if the knives are in line.
6. Verify the blade frames are parallel with each other and the machine frame members. When the eccentric pins are in the desired position tighten each of the locknuts to secure the position of the eccentrics.
7. Check the blade frame clearance by turning the motor by hand. If the knives are not inline, the blade frames may hit each other causing a knocking noise or the cutting efficiency of the machine may be greatly reduced. Continue adjusting as necessary.
8. Reverse steps 2 through 1 to return the slicer to working order.

Caster Replacement

WARNING

- **THE SLICER IS HEAVY, USE MECHANICAL MEANS SUCH AS A LEVER AND FULCRUM TO LIFT IT SLIGHTLY.**
- **SUPPORT THE SLICER SECURELY WITH STURDY BLOCKS.**
- **THE SLICER IS TOP-HEAVY, DO NOT TILT IT EXCESSIVELY (GREATER THAN 10 DEGREES).**

PROCEDURE:

1. Place the slicer on a firm level surface.
2. Orient the front casters front-to-back, swiveled as if the slicer were being pushed backwards, and lock them.
3. Jack, using a block and lever, from either the center of the back, or center of the front, depending on the casters to be replaced. Only lift the machine slightly, approximately ¼òto avoid tipping the machine over.
4. Securely block the elevated side. Test the support by shaking the slicer slightly before removing a caster.
5. Remove the caster by removing the 4 bolts attaching it to the stand.
6. Replace the caster and securely tighten the bolts with the lock washers in place.

Figure 7-18 Stand Jack Placement

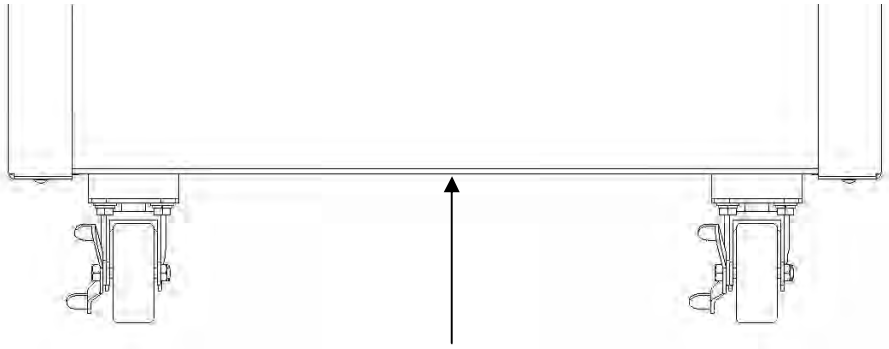

JACK AND SUPPORT IN THE MIDDLE
OF THE FRONT OR BACK OF THE STAND
WITH THE FRONT CASTERS LOCKED.

WARNING

ALWAYS UNPLUG THE SLICER BEFORE PERFORMING ANY TYPE OF MAINTENANCE AND CLEANING TASK
REPLACE ALL GUARDS AND COVERS BEFORE RECONNECTING TO POWER

Lubrication

1. Replace the lubricant on the blade frame plastic link pins with a food grade approved (NSF or FDA) grease whenever the plastic links at the top of the blade frames are removed or replaced.
2. Once yearly clean and re-apply grease the pusher slides with a food grade approved (NSF or FDA) lubricant with a swab or small brush.

NOTE

NEVER OIL OR GREASE THE MOTOR.

Cleaning

1. Daily or as necessary use a mild detergent solution to clean the exterior surfaces and empty the crumb tray.
2. Monthly (or as usage dictates) raise the top assembly and remove the side covers (see topics). Brush, vacuum or blow (if clean and dry compressed air is available), foreign material from all surfaces, especially moving parts.

CAUTION:

1. USE CARE CLEANING AROUND SHEET METAL AND SLICER BLADE EDGES TO AVOID CUTS.
2. USE CARE WHILE MOVING PARTS DURING CLEANING TO AVOID PINCH POINTS.

Oliver Packaging & Equipment Company
3236 WISON DR NW WALKER MI. 49534
(800) 253-3893
www.oliverquality.com

RECOMMENDED SPARE PARTS

PART NUMBER	PART DESCRIPTION	NO. REQ'D
5835-7705	Clip-Hairpin	4
68-3809-15021	Pin-Eccentric	4
68-3809-15901	Pin-Blade Frame	4
0711-0002	Link-Top	4
6301-3609*	Motor-1/2 HP, 1-60-115/230	1
5601-1127*	Belt-V (4L370) (60 Cycle Machines)	1
5749-8027*	Relay-Power (115 VAC)	1
5749-5674	Relay-Control (24VDC)	3
6310-0029	Gear motor, pusher drive	1
68-3809-5046	Pusher Drive Sprocket	1
6309-6026	DC Motor Drive	1
5746-5672	Logic Controller	1
5708-7920	Red ñStopò Pushbutton	1
5708-7931	ñStopò Contact Block	1
5757-7825	Membrane Start Switch w/ LED Indicators	1
5757-8002	Switch-Limit w/ roller (pusher control)	2
5757-8001	Switch-Limit w/ lever (cover switches)	4
68-3809-25004	Driven Pulley Assembly	1
68-3809-25003	Rocker Shaft Assembly	1
68-3809-100301	Rocker Arm Weldment	1
68-3809-10031	Stud-Swing	1
68-3809-002	Knife	As Reqôd.
0777-0970	Bolt-Eye	4
0777-0971	Cam-Clamp	4
5852-0050	Spring-Bellville	4
7022-3003	Spring (infeed detent)	1
6084-8712	Gas Spring (Model 938-N Only)	2

***For Other Electrics Contact the Factory**
For Service Parts Call Oliver Products @ 800-253-3893

MODEL 0908 FRAME AND STAND

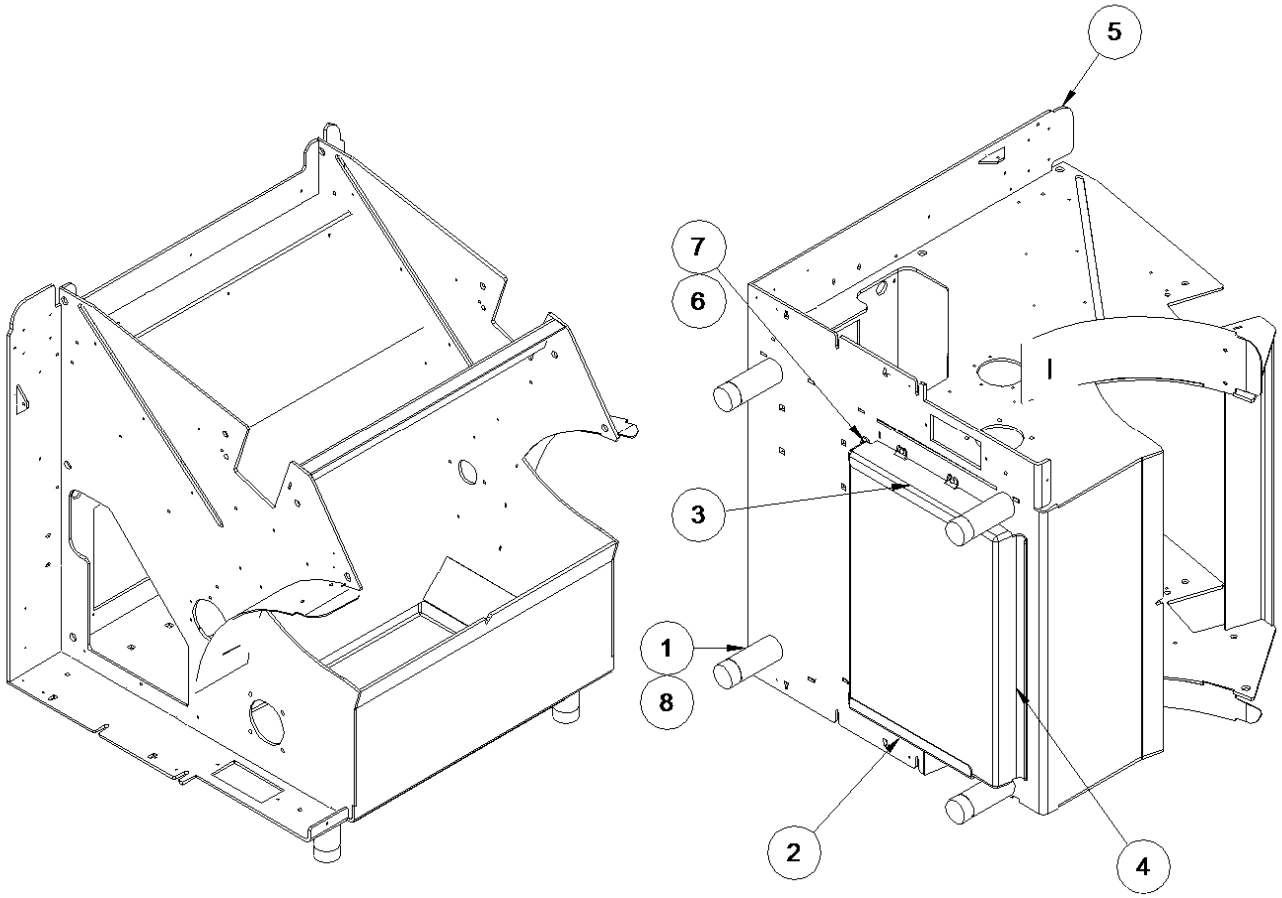

Item	Part Number	Description	Qty
1	0732-0003-001	LEG - EXTENSION (METRIC) ALUM	4
2	0908-0001-0001	NEXT GEN STAND, TRAY SUPPORT, R.H. B.C.	1
3	0908-0001-0002	NEXT GEN STAND, TRAY SUPPORT, L.H. B.C.	1
4	0908-0002	TRAY - CRUMB	1
5	0918-0001	WELDMENT, FRAME	1
6	5843-5384	SCREW-TRUSS HEAD 10-24 x 3/8 STST	6
7	5851-9394	WASHER- #10 STST INT TOOTH LOCK	6
8	5902-0036	BUMP/RUBR W/MOLDED M8 X 1.25 SCREW	4
9*	8843-6065	SCREW-STST SOCSET CUPPT M8 X 25MM	4

REF:0908-25000

MODEL 0918 FRAME AND STAND

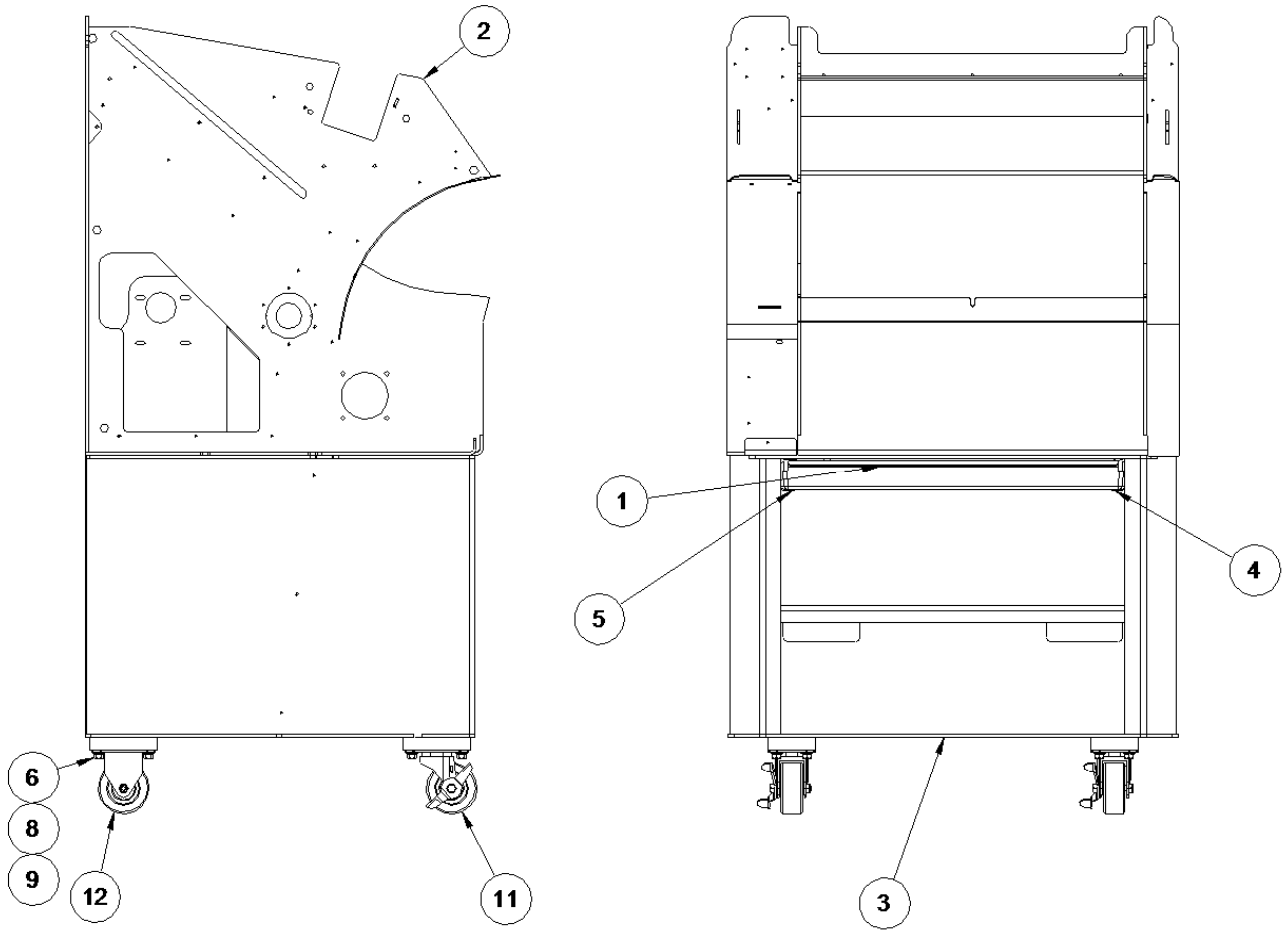

Item	Part Number	Description	Qty	Item	Part Number	Description	Qty
1	0711-0014-002	TRAY - CRUMB	1	8	5851-9305	WASHER - FLAT 5/16" 18-8 STST	16
2	0918-0001	WELDMENT, FRAME	1	9	5851-9358	WASHER-LOCK 5/16" STST 18-8	16
3	0918-0002	WELDMENT, NEXT GEN SLICER, BEHIND COUNTER	1	10*	5851-9394	WASHER- #10 STST INT TOOTH LOCK	6
4	0918-0003-0001	SIMP SLICE STAND, TRAY SUPPORT, R.H. B.C.	1	11	5902-2377	CASTER-3" SWVL WHL, W/BRK, BLU NSF	2
5	0918-0003-0002	SIMP SLICE STAND, TRAY SUPPORT, L.H. B.C.	1	12	5902-2378	CASTER-3" WHL, RGD PLT, BLU NSF	2
6	5843-1028	SCREW- HEX HD 5/16-18 X 3/4 STST	16	13*	8843-0561	SCREW-STST HEX HD M8 X 12MM	4
7*	5843-5383	SCREW-TRUSS HEAD 10-24 x 1/4 STST	6	14*	8851-9416	WASHER-SPRING LOCK M8 DIN127B	4

REF: 0918-25000

Oliver Packaging and Equipment Company (800) 253-3893
3236 Wilson DR NW Walker, MI 49534 www.oliverquality.com

MODEL 0938 FRAME AND STAND

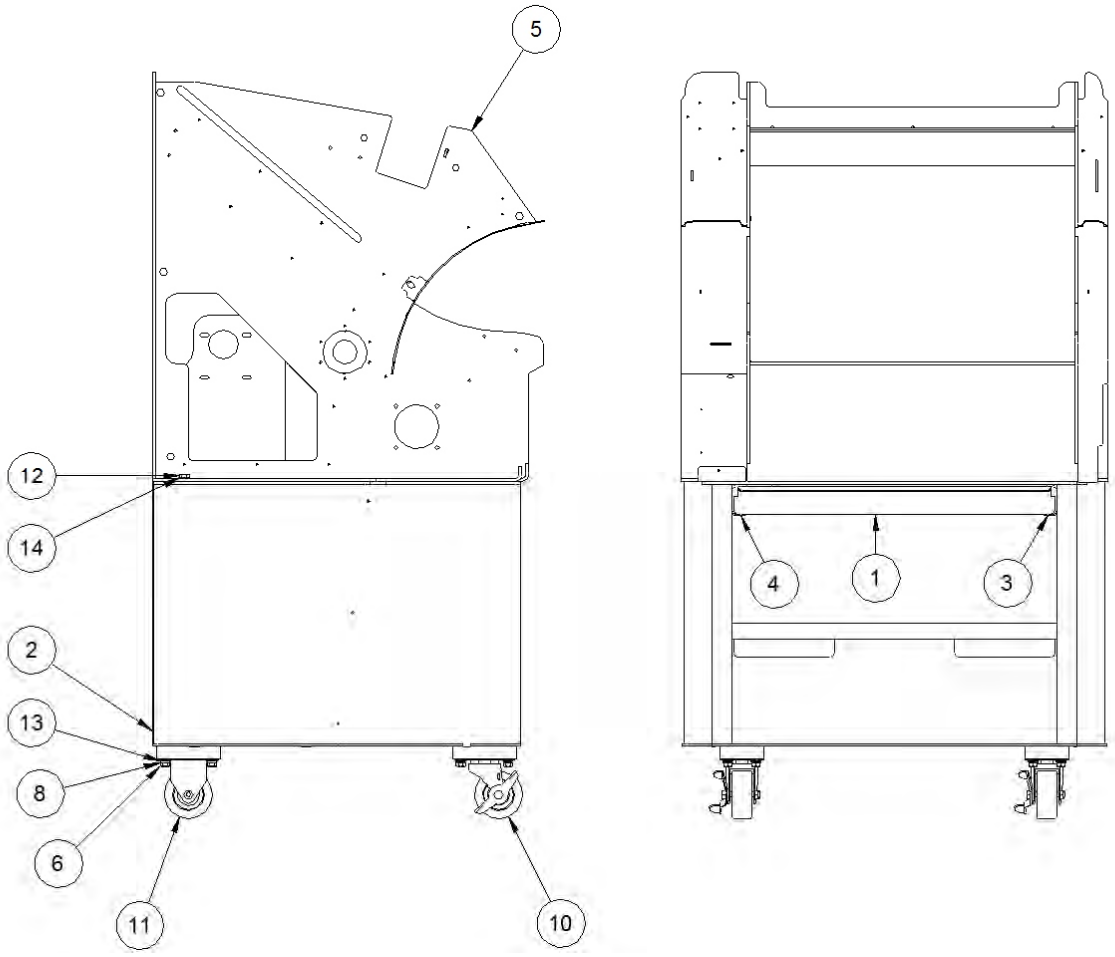

Item	Part Number	Description	Qty	Item	Part Number	Description	Qty
1	0711-0014-002	TRAY - CRUMB	1	8	5851-9358	WASHER-LOCK 5/16" STST 18-8	16
2	0918-0002	WELDMENT, NEXT GEN SLICER, BEHIND COUNTER	1	9*	5851-9394	WASHER- #10 STST INT TOOTH LOCK	6
3	0918-0003-0001	SIMP SLICE STAND, TRAY SUPPORT, R.H. B.C.	1	10	5902-2377	CASTER-3" SWVL WHL, W/BRK, BLU NSF	2
4	0918-0003-0002	SIMP SLICE STAND, TRAY SUPPORT, L.H. B.C.	1	11	5902-2378	CASTER-3" WHL, RGD PLT, BLU NSF	2
5	0938-0001	WELDMENT, FRAME	1	12*	8843-0561	SCREW-STST HEX HD M8 X 12MM	4
6	5843-1028	SCREW- HEX HD 5/16-18 X 3/4 STST	16	13	8851-8266	WASHER-FLAT STST M8	16
7*	5843-1230	SCREW-HEX HD #10-24 X 1/4, STST	6	14	8851-9416	WASHER-SPRING LOCK M8 DIN127B	4

REF: 0938-25000

PAGE INTENTIONALLY LEFT BLANK

ROCKER DRIVE COMPONENTS (BLADE MOVEMENT) (ALL MODELS)

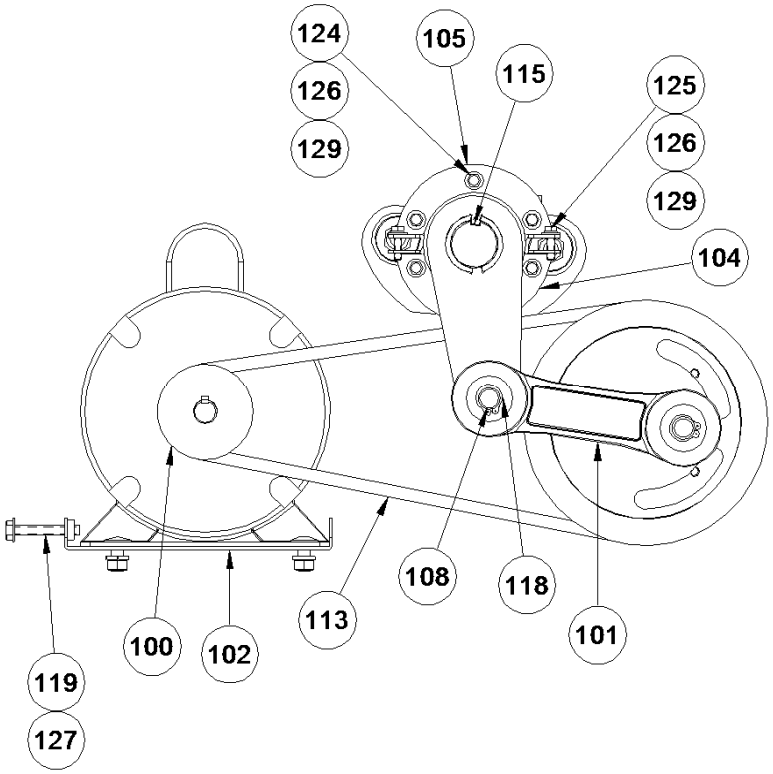

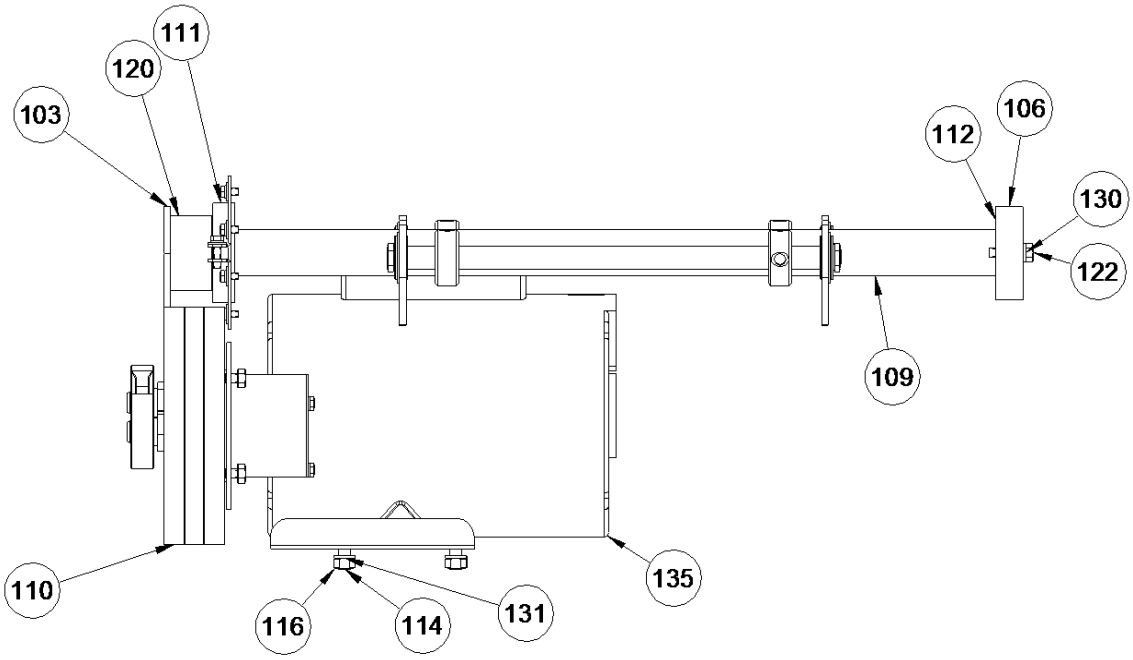

Oliver Packaging and Equipment Company (800) 253-3893
3236 Wilson DR NW Walker, MI 49534 www.oliverquality.com

908-N, 918-N, 938-N SIMPLE SLICE BREAD SLICERS

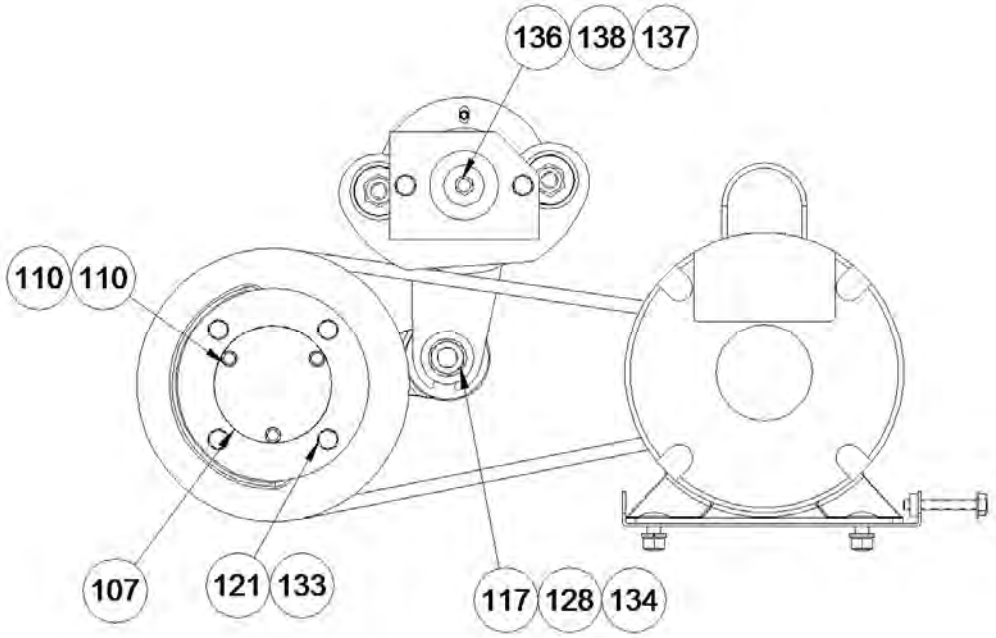

Item	Part Number	Description	Qty
100	0732-0018	PULLEY-V BELT 2-1/4 PD	1
101	0797-0071-4	MOLDED CONNECTOR W/BEARINGS	1
102	0918-0005	PLATE, MOTOR ADJUSTMENT	1
103	0918-0006	WELDMENT, ROCKER ARM	1
104	0918-0007	PLATE, BEARING RETAINER	1
105	0918-0008	PLATE, BEARING RETAINER	1
106	0918-0009	BLOCK, MAIN ROCKER BEARING MNT, RIGHT	1
107	0918-0010	CAP, DRIVEN PULLEY HOUSING COVER	1
108	0918-0011	STUD	1
109	0918-25002	ROCKER ASSEMBLY	1
110	0918-25003	DRIVEN PULLEY ASSEMBLY	1
111	5220-0048	BEARING-W/ SNP RING GRV 40MM BORE	1
112	5220-4040	BEARING-BALL 20 X 47 X 14 2 SEALS	1
113	5601-1127	BELT-V, 37" X 1/2"	1
114	5804-1730	BOLT, CARRIAGE 5/16-18 X 3/4	4
115	5824-2325	KEY-STST 1/4 SQ. X 1" LG.	1
116	5832-0521	NUT- HEX FULL 5/16-18NC FIN STST	4
117	5832-0554	NUT-HEX JAM 1/2-20 NF STST	1
118	5840-2825	RING-SNAP (EXTERNAL)	2

Item	Part Number	Description	Qty
119	5841-9058	SCREW- HEX HD 1/4-20 X 1-3/4 STST CONT THD.	1
120	5842-6133	SCREW-HEX SOC SET 1/4-20 X 3/8	4
121	5843-1000	SCREW- HEX HD 1/4-20 X 3/8 STST	4
122	5843-1005	SCREW- HEX HD 1/4-20 X 1 STST	2
123*	5843-1230	SCREW-HEX HD #10-24 X 1/4, STST	3
124	5843-1231	SCREW-HEX HD #10-24 X 3/8, STST	6
125	5843-1234	SCREW-HEX HD #10-24 X 3/4, STST	2
126	5851-9302	WASHER - FLAT No.10, 18-8 STST	8
127	5851-9304	WASHER - FLAT 1/4" 18-8 STST	1
128	5851-9308	WASHER - 1/2" FLAT 18-8 STST	1
129	5851-9355	WASHER - #10 STST SPRING LOCK	8
130	5851-9357	WASHER- LOCK 1/4 STST SPRING	2
131	5851-9358	WASHER-LOCK 5/16" STST 18-8	4
132*	5851-9394	WASHER- #10 STST INT TOOTH LOCK	3
133	5851-9395	WASHER-INT TOOTH 1/4	4
134	5851-9399	WASHER-1/2 INT TOOTH STST	1
135	6301-3609	MOTOR-1/2 HP 1-60-115/230	1
136	8843-0545	SCREW-STST HEX HD M6 X 20MM	1
137	8851-8466	WASHER-STST FLAT M8 DIN 9021	1
138	8851-9864	WASHER-STST INT TOOTH M6	1

REF: 0918-25001

PUSHER DRIVE COMPONENTS (BREAD MOVEMENT) (ALL MODELS)

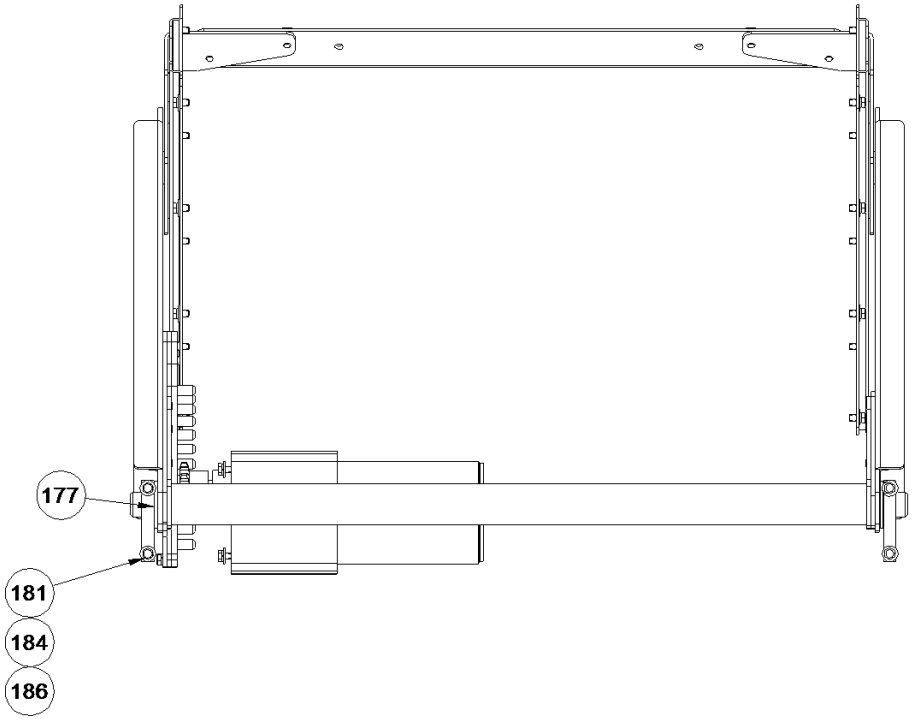

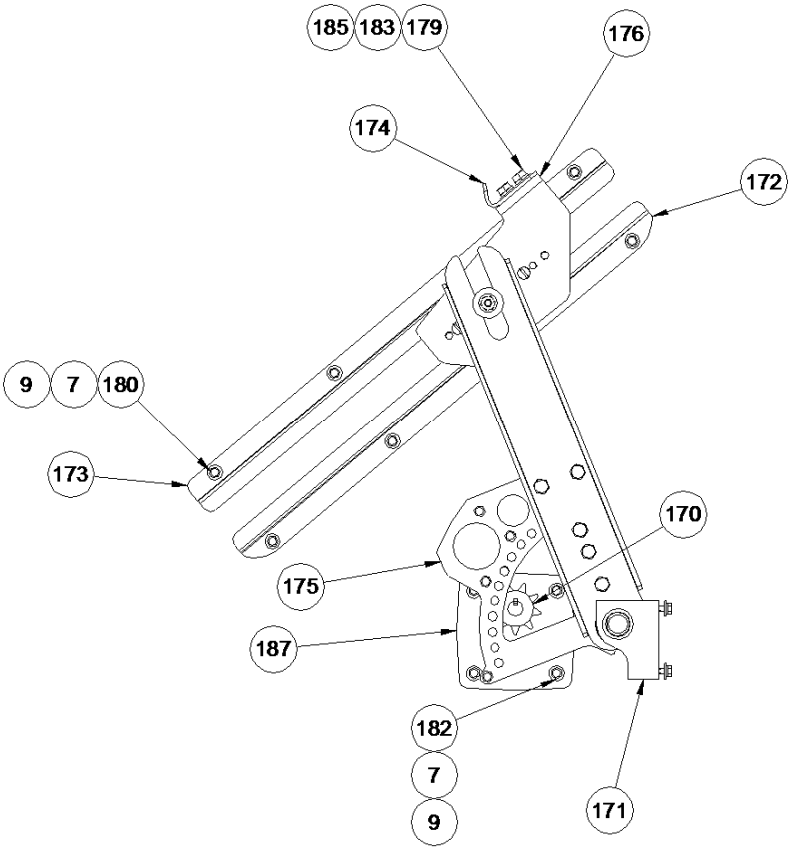

PUSHER DRIVE COMPONENTS (BREAD MOVEMENT) (ALL MODELS)

Item	Part Number	Description	Qty
170	0918-0014	NYLON SPROCKET 40B9 1/2"	1
171	0918-0015	BLOCK, PUSHER PIVOT	2
172	0918-0016	GUIDE, PUSHER SLIDE BOTTOM	2
173	0918-0017	GUIDE, PUSHER SLIDE TOP	2
174	0918-0018	BAR, PUSHER SUPPORT	1
175	0918-25005	PUSHER ARM ASSEMBLY	1
176	0918-25006	PUSHER SLIDE BLOCK ASSEMBLIES L.H.-R.H.	1
177	5254-3032	BEARING-SINT BRZ FLNG FF1011-2	2
178*	5842-6133	SCREW-HEX SOC SET 1/4-20 X 3/8	1
179	5843-1000	SCREW- HEX HD 1/4-20 X 3/8 STST	4

Item	Part Number	Description	Qty
180	5843-1231	SCREW-HEX HD #10-24 X 3/8, STST	16
181	5843-1233	SCREW-HEX HD #10-24 X 5/8, STST	4
182	5843-1453	SCREW-HEX HD #10-32 X 3/4, STST	4
183	5851-9008	WASHER-1/4" HELICAL SPRING LOCK	4
184	5851-9302	WASHER - FLAT No.10, 18-8 STST	25
185	5851-9304	WASHER - FLAT 1/4" 18-8 STST	4
186	5851-9355	WASHER - #10 STST SPRING LOCK	24
187	6310-0029	GEARMOTOR, 1/20 HP, 20 RPM, 90VDC	1

REF: 0918-25004

908-N, 0918-N, 938-N SIMPLE SLICE BREAD SLICERS

TOP ASSEMBLY COMPONENTS

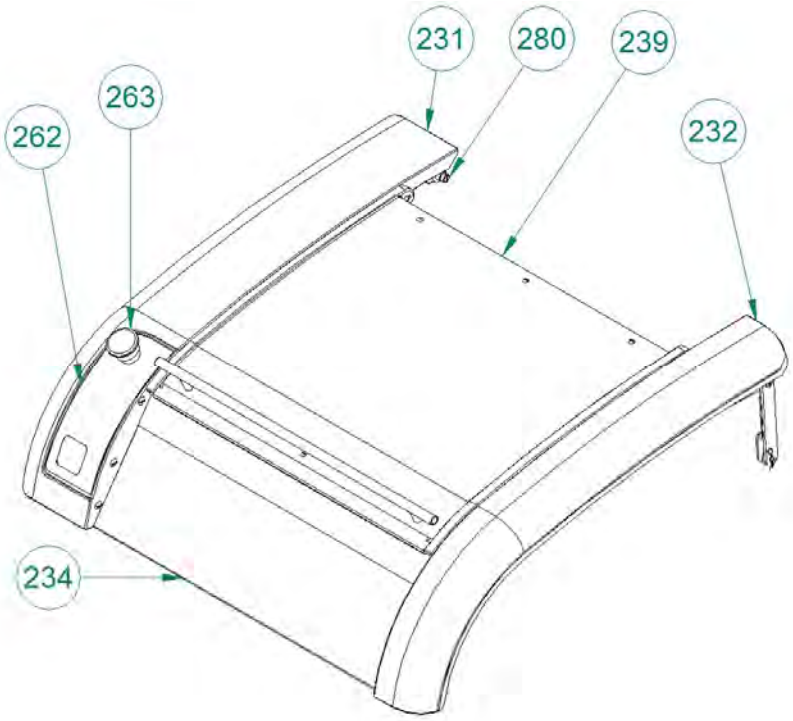

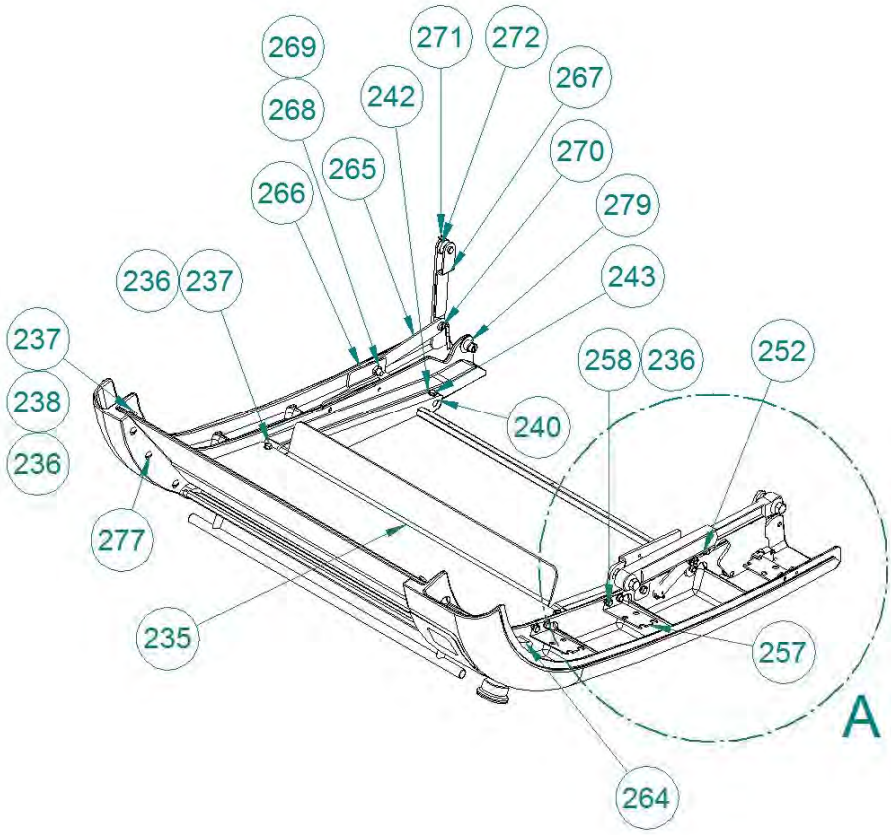

908-N, 0918-N, 938-N SIMPLE SLICE BREAD SLICERS

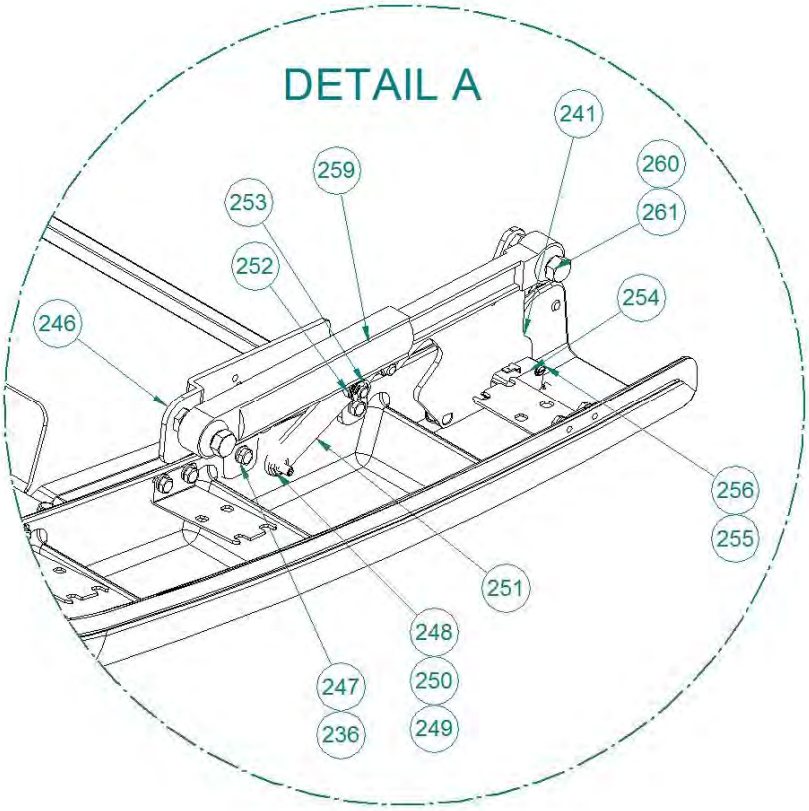

Item	Part Number	Description	Qty
231	0918-0030	UPPER LEFT CORNER COVER	1
232	0918-0031	UPPER RIGHT CORNER COVER	1
233*	5254-0102	BEARING-SINT BRZ SLV AA507-11	4
234	5500-5347	PLASTIC PANEL, FRONT	1
235	0938-0019	CHANNEL, TOP CONNECTOR	1
236	5851-9394	WASHER- #10 STST INT TOOTH LOCK	20
237	5843-1232	SCREW-HEX HD #10-24 X 1/2, STST	9
238	5851-9302	WASHER - FLAT No.10, 18-8 STST	4
239	0918-25008	INFEED COVER ASSEMBLY	1
240	0918-0032	PIN, TOP COVER PIVOT R.H.	1
241	0918-0034	WELDMENT, INFEED COVER DETENT CAM	1
242	5851-8132	WASHER- NYLON FLAT 3/8 I.D. X 3/4 O.D X 0.060"	2
243	5843-1453	SCREW-HEX HD #10-32 X 3/4, STST	1
244*	5824-2303	KEY-STST 1/8 SQ X 1/2 LG	1
245*	5842-6120	SCREW-HEX SOC SET 10-24 X 3/16	2

908-N, 0918-N, 938-N SIMPLE SLICE BREAD SLICERS

REF: 0918-25007

Item	Part Number	Description	Qty
246	0918-0037	WELDMENT, INFEED COVER DETENT MOUNT BRACKET.	1
247	5843-1231	SCREW-HEX HD #10-24 X 3/8, STST	5
248	7022-3003	SPRING-TENS 3/8 OD X .048 X 1 3/4L	1
249	5832-0407	NUT-HEX ---10-24 STST	2
250	5843-2024	SCREW-SOC SET 10-24 X 1/2" STST CUPPT	1
251	0918-0033	WELDMENT, INFEED COVER DETENT LEVER	1
252	5254-3076	BEARING-SINT BRZ FLANGE 1/4 I.D. X 3/8 O.D. X 3/8L	2
253	5840-1273	RING RETAINING 1/4	1
254	5757-8001	SWITCH-SM BASIC	1
255	5843-5525	SCREW-PANHD SLOT 4-40 X 5/8	2
256	5851-9391	WASHER-INT TOOTH #4	2
257	0918-0039	BRACKET, WIRE HOLDER	3
258	5843-1230	SCREW-HEX HD #10-24 X 1/4, STST	6
259	5904-0024	100N DAMPER	1
260	5832-0501	NUT-HEX JAM 5/16-18	2
261	5843-1031	SCREW-STST HEX HD 5/16-18 X 1-1/4	2

Item	Part Number	Description	Qty
262	5757-7825	MEMBRANE SWITCH & LED INDICATOR LAMINATE	1
263	5708-7920	OPERATOR-P.B. MUSHROOM HD RED	1
264	5708-7931	BASE-MTG/BLOCK-CONTACT NC	1
265	0918-0036	LINK, COVER PROP	1
266	0918-0043	TOP ASSY SUPPORT BRACKET	1
267	0918-0044-1	PROP, TOP ASSEMBLY	1
268	5832-0520	NUT- HEX FULL 1/4-20NC FIN STST	1
269	5843-1002	SCREW- HEX HD 1/4-20 X 5/8 STST	1
270	5803-5000	BINDING POST 1/4" DIA. X 1/4L	1
271	5915-8057	CLEVIS PIN WITH HAIR PIN CLIP 1/4 DIA X 3/4	1
272	0918-0120	SPACER, TOP ASSEMBLY PROP	1
277	5843-5384	SCREW-TRUSS HEAD 10-24 x 3/8 STST	6
279	0918-0040	BUSHING-TOP ASSEMBLY	2
280	5842-8959	SCREW- SHOULDER 5/16 DIA X 1/2, SLOTTED	2

BAGGING PLATFORM (SCOOP) COMPONENTS (MODELS 908-N, 918-N ONLY)

Item	Part Number	Description	Qty
1	0711-0080	STOP-BREAD	1
2	0918-0041	SCOOP, BAGGING	1
3	0918-0042	BRACKET, FRONT SCOOP MNT.	1
4	4560-2508-1106	SCREW- CLAMP	1
5	5843-5385	SCREW-SLTD TRSHD MACH 10X1/2SS	3
6*	5851-9394	WASHER- #10 STST INT TOOTH LOCK	3

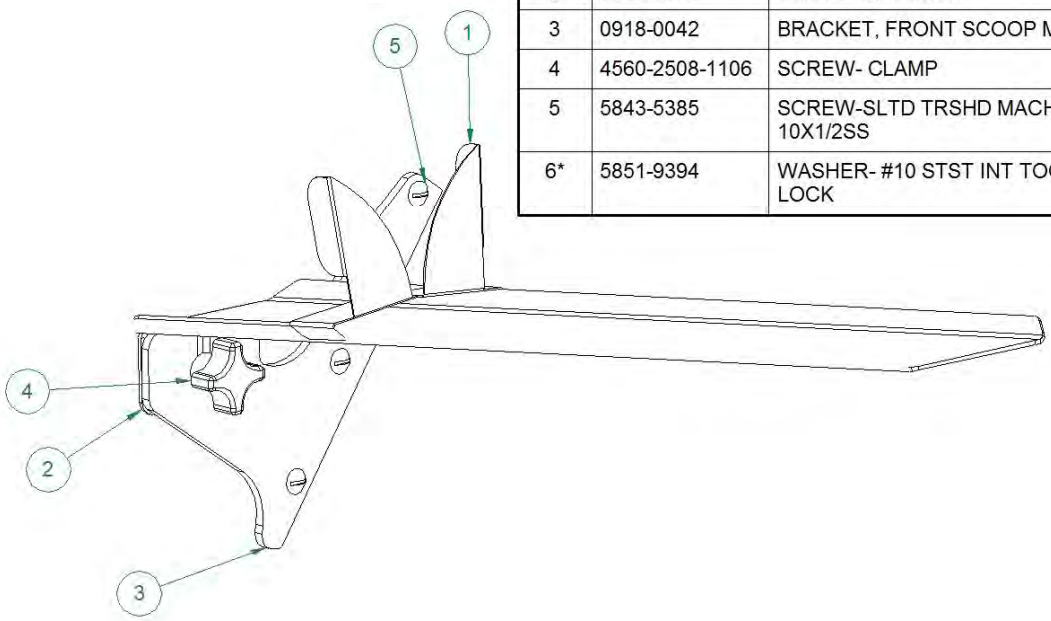

PAGE INTENTIONALLY LEFT BLANK

Oliver Packaging and Equipment Company (800) 253-3893
3236 Wilson DR NW Walker, MI 49534 www.oliverquality.com

908-N, 918-N, 938-N SIMPLE SLICE BREAD SLICERS

BLADE FRAME HARDWARE (ALL MODELS)

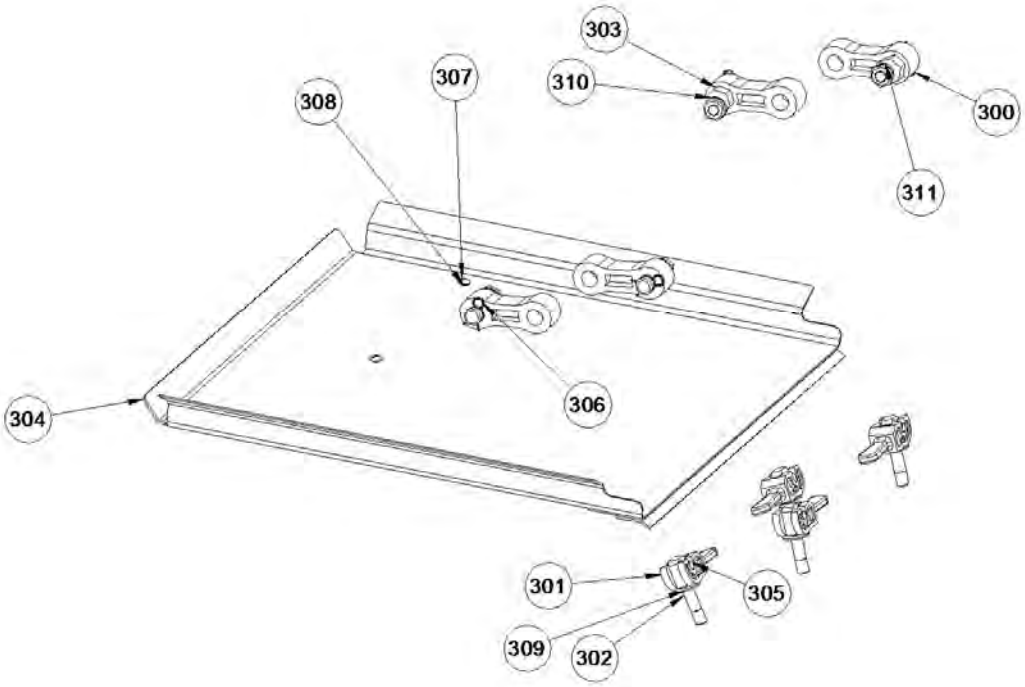

Item	Part Number	Description	Qty
300	0711-0002	LINK	4
301	077-0971	CAM	4
302	0777-0970-0013	BOLT-EYE	4
303	0918-0028	PIN-ECCENTRIC, SHORT	4
304	0918-0029	INFEED TABLE WELDMENT	1
305	5835-6497	PIN - DOWEL 5/16 X 7/8 STST	4
306	5835-7705	HAIRPIN CLIP 3/8" GROVE DIA	4
307	5843-5384	SCREW-TRUSS HEAD 10-24 x 3/8 STST	3
308	5851-9394	WASHER- #10 STST INT TOOTH LOCK	3
309	5852-0050	WASHER - STST BELLEVILLE, 7/8	4
310	8832-0418	NUT-HEX JAM M10	4
311	8851-9468	WASHER-SPRING LOCK M10	4

REF: 0918-25007

Oliver Packaging and Equipment Company (800) 253-3893
3236 Wilson DR NW Walker, MI 49534 www.oliverquality.com

908-N, 918-N, 938-N SIMPLE SLICE BREAD SLICERS

908-N COVERS

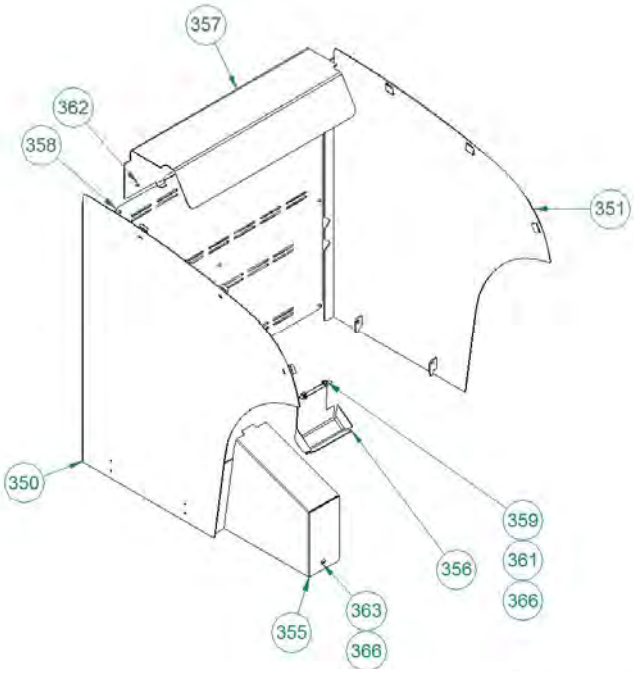

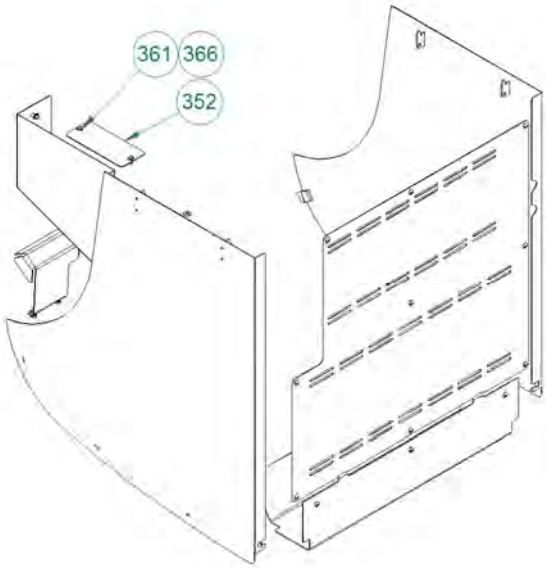

Item	Part Number	Description	Qty
350	0908-0003	PANEL. L.H. SIDE WELDMENT	1
351	0908-0004	PANEL, R.H. SIDE WELDMENT	1
352	0908-0005	PLATE, FRAME COVER	1
355	0918-0053	COVER, PULLEY, BEH. CTR.	1
356	0918-0054	HOLDER, WIRE TIES	1
357	0918-0056	COVER, REAR TOP ENCLOSURE	1
358	0918-0057	REAR COVER	1
359	5832-0407	NUT-HEX ---10-24 STST	2

Item	Part Number	Description	Qty
361	5843-1231	SCREW-HEX HD #10-24 X 3/8, STST	4
362	5843-5383	SCREW-TRUSS HEAD 10-24 x 1/4 STST	15
363	5843-5384	SCREW-TRUSS HEAD 10-24 x 3/8 STST	1
365*	5851-9357	WASHER- LOCK 1/4 STST SPRING	1
366	5851-9394	WASHER- #10 STST INT TOOTH LOCK	20

REF: 0908-25012

918-N COVERS

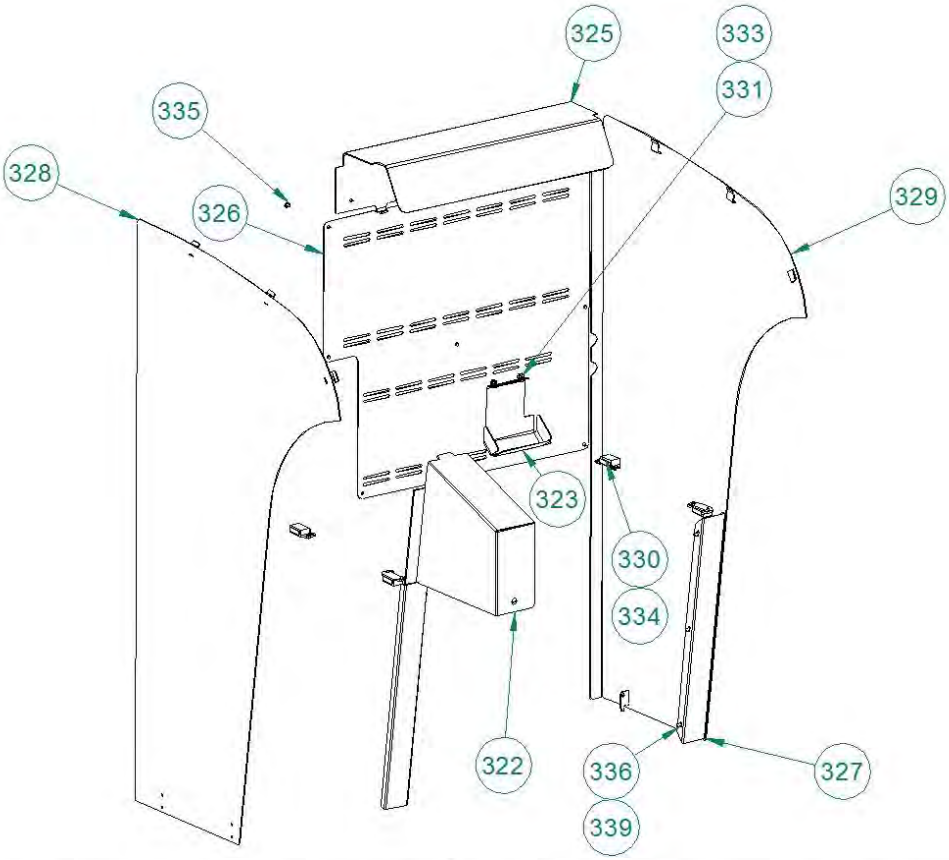

Item	Part Number	Description	Qty
322	0918-0053	COVER, PULLEY, BEH. CTR.	1
323	0918-0054	HOLDER, WIRE TIES	1
325	0918-0056	COVER, REAR TOP ENCLOSURE	1
326	0918-0057	REAR COVER	1
327	0918-0058	STAND CHANNEL	2
328	0918-0059	PANEL. L.H. SIDE WELDMENT	1
329	0918-0060	PANEL, R.H. SIDE WELDMENT	1
330	5805-2503	CATCH-MAGNETIC	4
331	5832-0407	NUT-HEX ---10-24 STST	2

Item	Part Number	Description	Qty
333	5843-1231	SCREW-HEX HD #10-24 X 3/8, STST	2
334	5843-5360	SCREW-TRUSS HEAD 6-32 x 1/4 STST	8
335	5843-5383	SCREW-TRUSS HEAD 10-24 x 1/4 STST	14
336	5843-5384	SCREW-TRUSS HEAD 10-24 x 3/8 STST	7
339	5851-9394	WASHER- #10 STST INT TOOTH LOCK	21

REF: 0918-25012

938-N COVERS (See next section for Outfeed Cover)

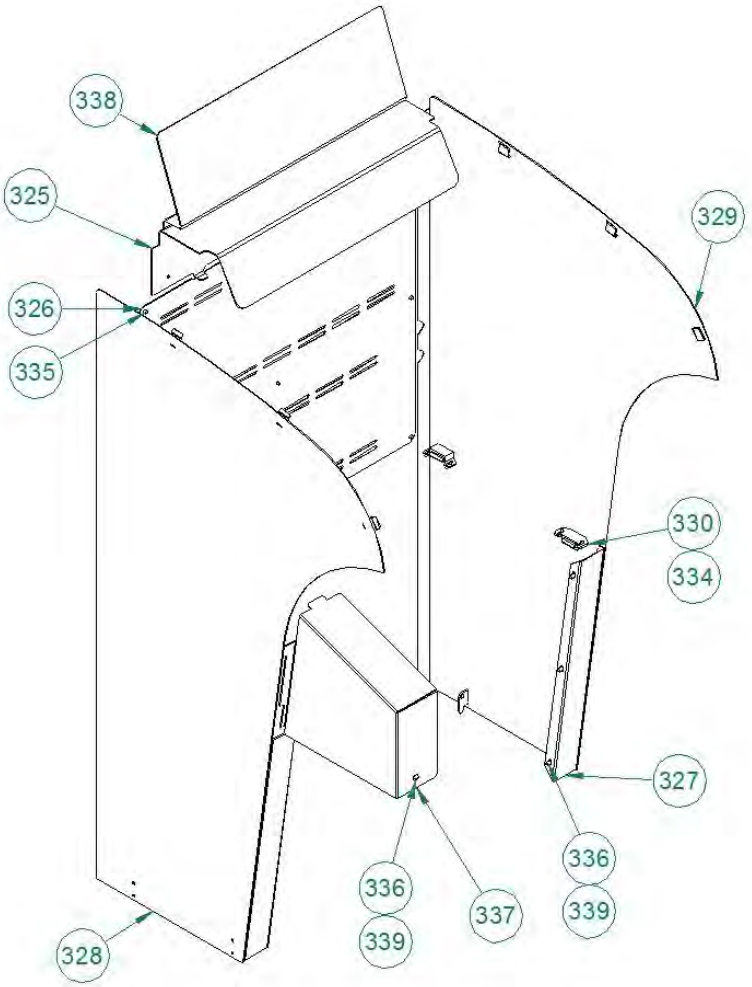

Item	Part Number	Description	Qty
325	0918-0056	COVER, REAR TOP ENCLOSURE	1
326	0918-0057	REAR COVER	1
327	0918-0058	STAND CHANNEL	2
328	0918-0059	PANEL. L.H. SIDE WELDMENT	1
329	0918-0060	PANEL, R.H. SIDE WELDMENT	1
337	0938-0014	COVER, PULLEY, S.S.	1
338	0938-0015	SIGNAGE HOLDER	1
330	5805-2503	CATCH-MAGNETIC	4

Item	Part Number	Description	Qty
334	5843-5360	SCREW-TRUSS HEAD 6-32 x 1/4 STST	8
335	5843-5383	SCREW-TRUSS HEAD 10-24 x 1/4 STST	14
336	5843-5384	SCREW-TRUSS HEAD 10-24 x 3/8 STST	7
339	5851-9394	WASHER- #10 STST INT TOOTH LOCK	19

REF: 0938-25012

938-N OUTFEED COVER

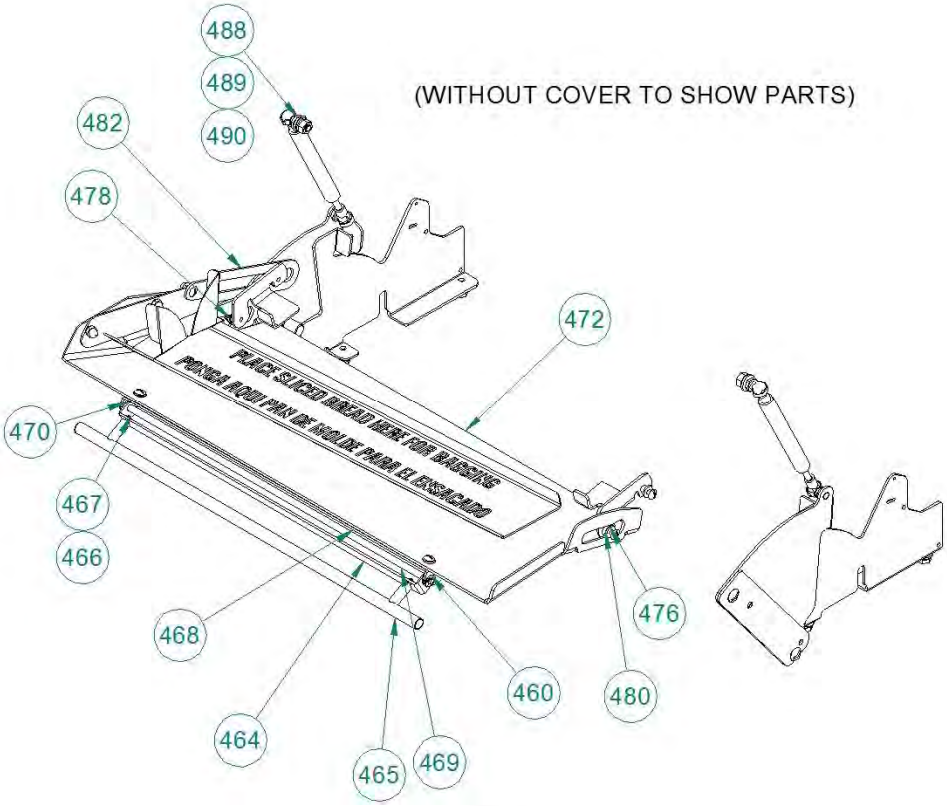

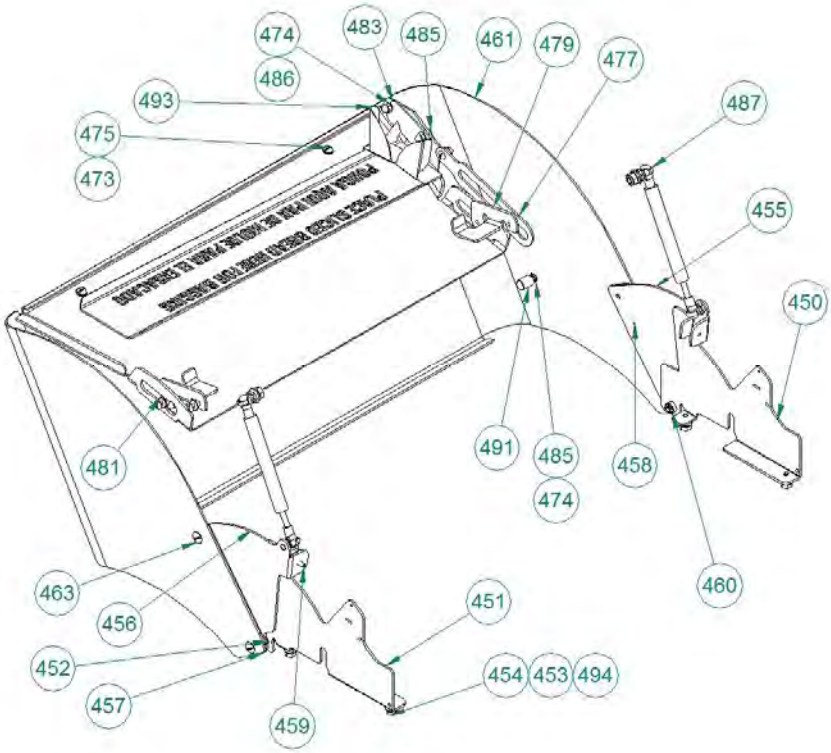

Oliver Packaging and Equipment Company
3236 Wilson DR NW Walker, MI 49534
(800) 253-3893
www.oliverquality.com

908-N, 918-N, 938-N SIMPLE SLICE BREAD SLICERS

938-N OUTFEED COVER (Continued)

Item	Part Number	Description	Qty	Item	Part Number	Description	Qty
450	0938-0013-0001	WELDMENT, OUTFEED COVER MOUNT, L.H.	1	473	5851-9302	WASHER - FLAT No.10, 18-8 STST	4
451	0938-0013-0002	WELDMENT, OUTFEED COVER MOUNT, R.H.	1	474	5851-9394	WASHER- #10 STST INT TOOTH LOCK	10
452	5254-3076	BEARING-SINT BRZ FLANGE 1/4 I.D. X 3/8 O.D. X 3/8L	2	475	5843-5384	SCREW-TRUSS HEAD 10-24 x 3/8 STST	4
453	5851-9357	WASHER- LOCK 1/4 STST SPRING	4	476	0938-0010	SPACER HUB	4
454	5843-1001	SCREW- HEX HD 1/4-20 X 1/2 STST	4	477	5843-5386	SCREW-SLTD TRSHD MACH 10X5/8SS	4
455	0938-0012-0001	WELDMENT, OUTFEED PIVOT, L.H.	1	478	0938-0011	ROLLER, GUIDE	2
456	0938-0012-0002	WELDMENT, OUTFEED PIVOT, R.H.	1	479	0938-0008-0001	BRACKET, TABLE SUPPORT, L.H.	1
457	0938-0017	PLATE, OUTFEED DOOR SPACER	2	480	5250-0376	BEARING, BALL 5/16 X 1/2 X 3/16W EXT INNER RACE	1
458	5843-5040	SCREW-STST FLAT HD #6-32 X 1/4	2	481	0938-0008-0002	BRACKET, TABLE SUPPORT, R.H.	1
459	5902-0035	BUMPER-RUBBER	1	482	0938-0018	PLATE, SCOOP LIFT SLIDE	1
460	5840-1273	RING RETAINING 1/4	4	483	0938-0007	BAGGING SCOOP, PIVOTING	1
461	0938-0002	OUTFEED COVER	1	485	5843-5385	SCREW-SLTD TRSHD MACH 10X1/2SS	2
463	5843-5411	SCREW-TRUSS HD SLTD 1/4-20 X 3/8 STST	4	486	5832-0585	NUT- ACORN 3/16 {10-24} STST	3
464	0938-0003	BRACKET, OUTER OUTFEED HINGE	1	487	6084-8712	GAS SPRING ASSEMBLY 20#	2
465	5916-5514	HANDLE, BAR 15 1/8L STST	1	488	5851-9305	WASHER - FLAT 5/16" 18-8 STST	2
466	5851-9393	WASHER-INT TOOTH #8	2	489	5851-9358	WASHER-LOCK 5/16" STST 18-8	2
467	5843-5225	SCREW-ROUND HD 8-32 X 1/2 STST	2	490	5832-0521	NUT- HEX FULL 5/16-18NC FIN STST	2
468	0938-0004	BRACKET, INNER OUTFEED HINGE	1	491	0938-0016	SWING STOP	1
469	0938-0005	PIN, OUTFEED DOOR HINGE	1	493	0711-0080	STOP-BREAD	1
470	5851-8119	NYLON WASHER, 1/4 X 1/2 X 1/16	2	494	5851-9304	WASHER - FLAT 1/4" 18-8 STST	4
472	0938-0006	TABLE, INNER COVER	1	495*	5851-9395	WASHER-INT TOOTH 1/4	4

PAGE INTENTIONALLY LEFT BLANK

908-N, 918-N, 938-N SIMPLE SLICE BREAD SLICERS

SLICE SPACING SPECIFIC PARTS (1/2òSHOWN)

Item	Part Number	Description	Qty
1	0918-25100-32	ASSY, 1/2" BLADE FRAME 18" PAIR	1
2	0938-0009-32	PANEL, OUTFEED TABLE, 1/2" SPACING	1
3	0938-0260-32	PUSHER, 1 PC, 1/2" SPACING	1
4	0938-25103-32	ASSEMBLY, HOLD DOWN, 1/2" ONE-PIECE	1
5	4560-2508-1106	SCREW- CLAMP	2

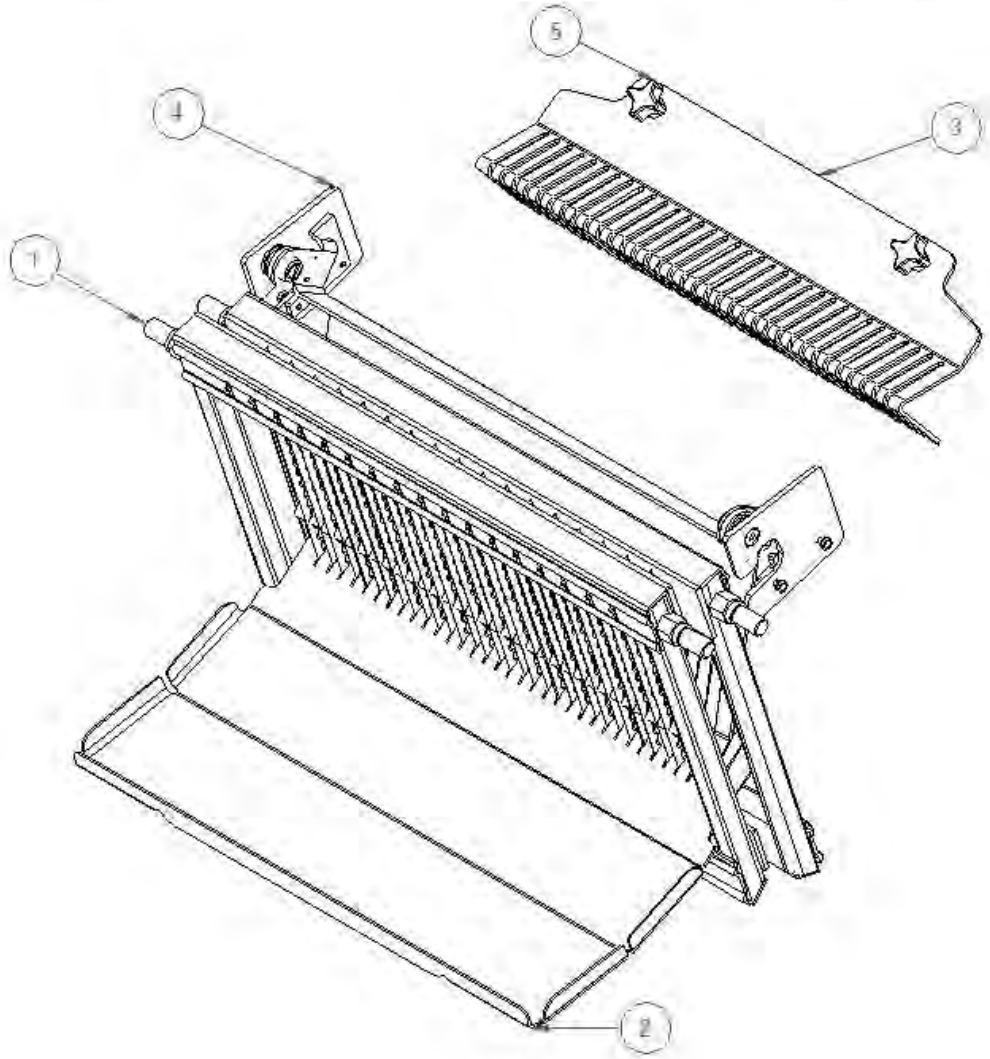

NOTE: PART NUMBERS FOR SLICE SPACINGS ARE BASED ON 1/64 INCHES, i.e. -32 is ½ò 32/64= ½ -48 is ¾ 48/64 = ¾

REF: 0938-25101-32

Oliver Packaging and Equipment Company (800) 253-3893
3236 Wilson DR NW Walker, MI 49534 www.oliverquality.com

SPLCE SPACING SPECIFIC PARTS (1/2òSHOWN, ALTERNATE MULTI-PIECE HOLD DOWN STYLE)

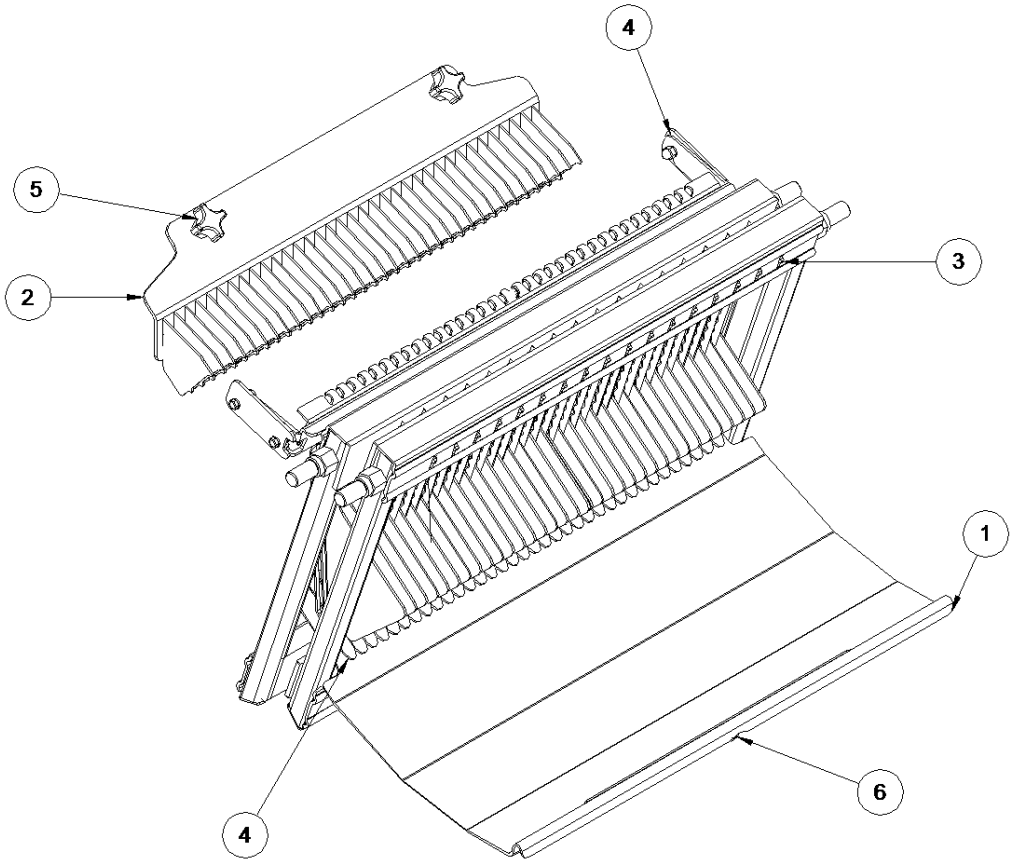

Item	Part Number	Description	Qty
1	0918-0209-32	PANEL, OUTFEED TABLE, 1/2" SPACING	1
2	0918-0215-32	WELDMENT, PUSHER, 1/2" SPACING	1
3	0918-25100-32	ASSY, 1/2" BLADE FRAME 18" PAIR	1
4	0918-25102-32	ASSY, HOLDOWN, 1/2" SPACING	1
5	4560-2508-1106	SCREW- CLAMP	2
6	5843-5384	SCREW-TRUSS HEAD 10-24 x 3/8 STST	1
7*	5851-9302	WASHER - FLAT No.10, 18-8 STST	1
8*	5851-9394	WASHER- #10 STST INT TOOTH LOCK	1

REF: 0918-25101-32

Oliver Packaging and Equipment Company (800) 253-3893
3236 Wilson DR NW Walker, MI 49534 www.oliverquality.com

908-N, 918-N, 938-N SIMPLE SLICE BREAD SLICERS

ELECTRICAL COMPONENTS

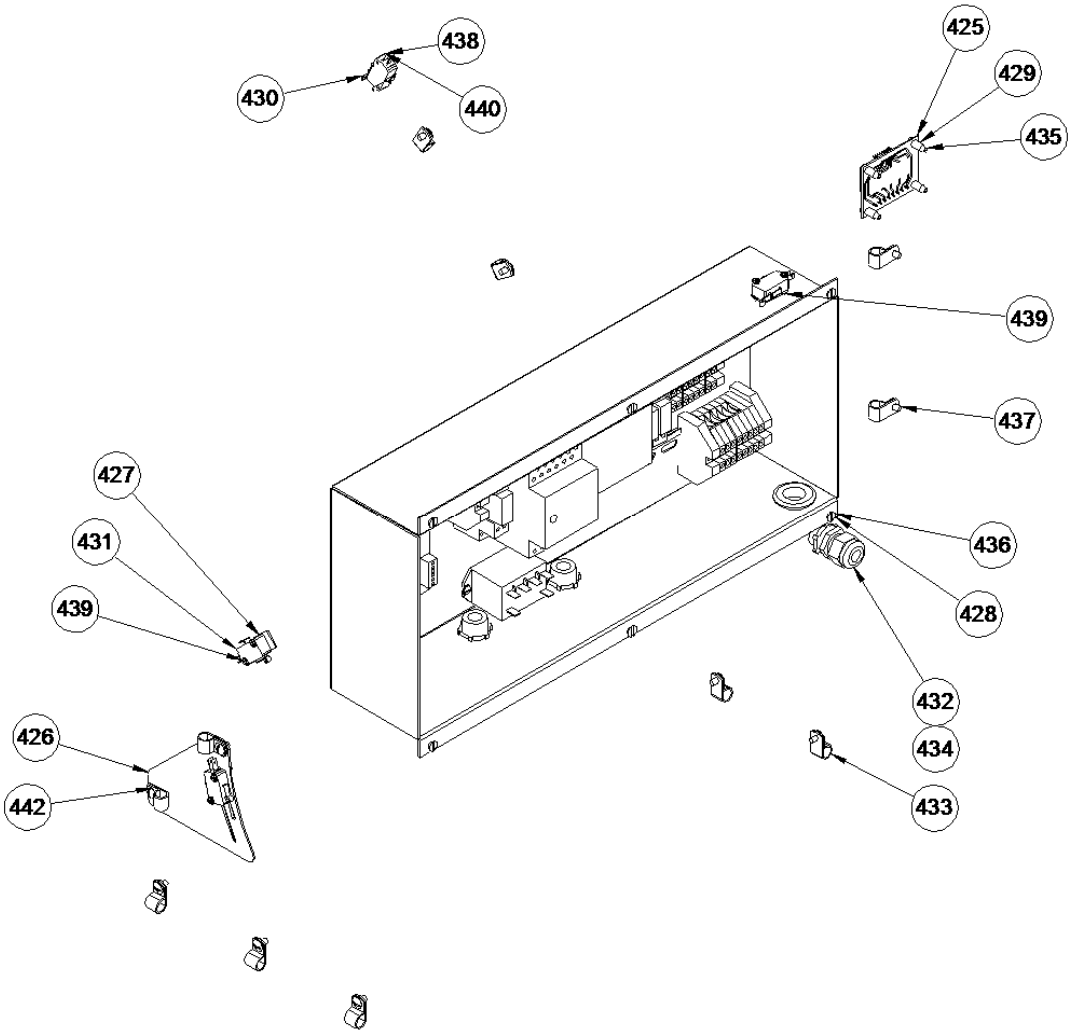

Item	Part Number	Description	Qty
425	0918-0062	CIRCUIT BOAD ASSEMBLY	1
426	0918-0063	PLATE, LIMIT SWITCH MNT.	1
427	0918-0064	PLATE, LIMIT SW. NUT	3
428	0918-25011	ELECTRICAL PANEL ASSEMBLY	1
429	5756-6118	STANDOFF, 1/4 O.D. X 3/8 L. #8 SCREW	4
430	5757-8001	SWITCH-SM BASIC	3
431	5757-8002	SWITCH-SM BASIC W/ ROLLER	2
432	5765-1082	RELIEF-STRAIN 1/2NPT	1
433	5765-4232	CLAMP - CABLE 3/8" (UL RECGNZD)	14
434	5766-7750	NUT-LOCK APPLETON # BL-50	1

Item	Part Number	Description	Qty
435	5843-1223	SCREW-HEX HD #8-32 X 5/8, STST	4
436	5843-5067	F.H. MACHINE SCREW, SLOTTED #10-24 X 3/8	6
437	5843-5384	SCREW-TRUSS HEAD 10-24 x 3/8 STST	14
438	5843-5525	SCREW-PANHD SLOT 4-40 X 5/8	4
439	5843-5526	SCREW-PANHD SLOT 4-40 X 3/4	6
440	5851-9391	WASHER-INT TOOTH #4	10
441*	5851-9393	WASHER-INT TOOTH #8	4
442	5851-9394	WASHER- #10 STST INT TOOTH LOCK	14

NOTE: 1 ADDITIONAL ITEM 430, P/N 5757-8001 REQUIRED FOR MODEL 0938 OUTFEED COVER.

SEE ALSO:
BLADE MOTOR, PAGE 9-1, PUSHER MOTOR PAGE 10-1, USER INTERFACE AND E-STOP PAGE 11-1
REF: 0918-25010, 0938-25010

Oliver Packaging and Equipment Company (800) 253-3893
3236 Wilson DR NW Walker, MI 49534 www.oliverquality.com

ELECTRICAL PANEL COMPONENTS

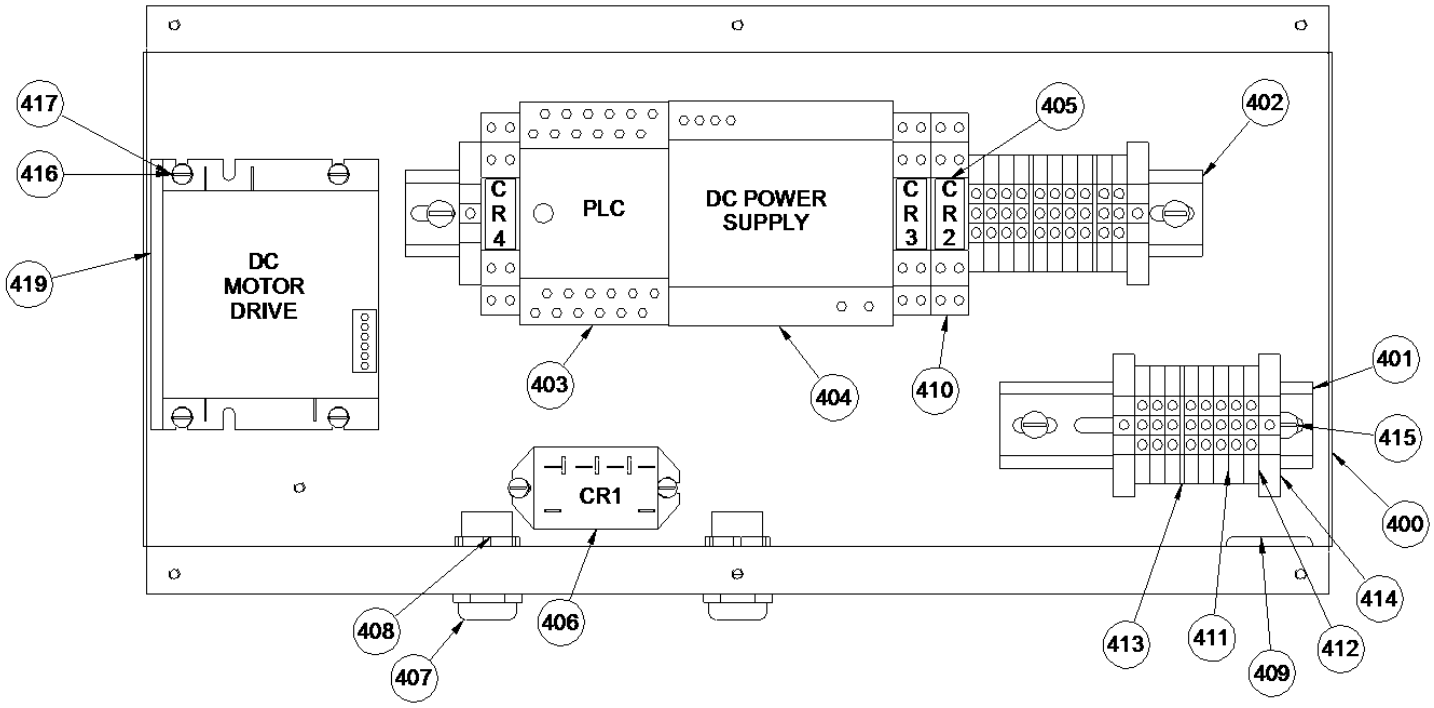

Item Number	Part Number	Description	Qty
400	0918-0061	PANEL, ELECTRICAL	1
401	4516-3507-2040	STEEL DIN RAIL 35MM X 5"	1
402	4516-3507-2102	STEEL DIN RAIL 35MM X 12 3/4"	1
403	5712-8031	MITSUBISHI PLC-FX3S-14MR/ES, 8 in/ 6 out	1
404	5746-5672	CARLO GAVAZZI POWER SUPPLY PS-91w 24vdc CLASS 2	1
405	5749-5674	RELAY, DPDT, FINDER	3
406	5749-8027	RELAY	1
407	5765-1082	RELIEF-STRAIN 1/2NPT	2
408	5766-7750	NUT-LOCK APPLETON # BL-50	2
409	5767-1208	GROMMET-3/4" ID X 1 1/16" OD X 1/16" GRV.	1
410	5770-2832	SOCKET-8 PIN FINDER# 95.85.3	3

Item Number	Part Number	Description	Qty
411	5770-7472	TERMINAL BLOCK, 10 GA.	16
412	5770-7473	TERMINAL BLOCK, 10 GA., GROUNDING	2
413	5770-7474	BARRIER	3
414	5770-7475	END BLOCK	4
415	5843-5384	SCREW-TRUSS HEAD 10-24 x 3/8 STST	4
416	5843-5553	SCREW-PANHD SLOT 8-32 x 3/8 STST	6
417	5851-9393	WASHER-INT TOOTH #8	6
418*	5851-9394	WASHER- #10 STST INT TOOTH LOCK	4
419	6309-6026	CONTROL-DC DR ADJ HP 115/230	1

REF: 0918-25011

Oliver Packaging and Equipment Company (800) 253-3893
3236 Wilson DR NW Walker, MI 49534 www.oliverquality.com

908-N, 918-N, 938-N SIMPLE SLICE BREAD SLICERS

ELECTRICAL DIAGRAM PG. 1 OF 3 (ALL MODELS)

REF 0918-25010 AND 0938-25010

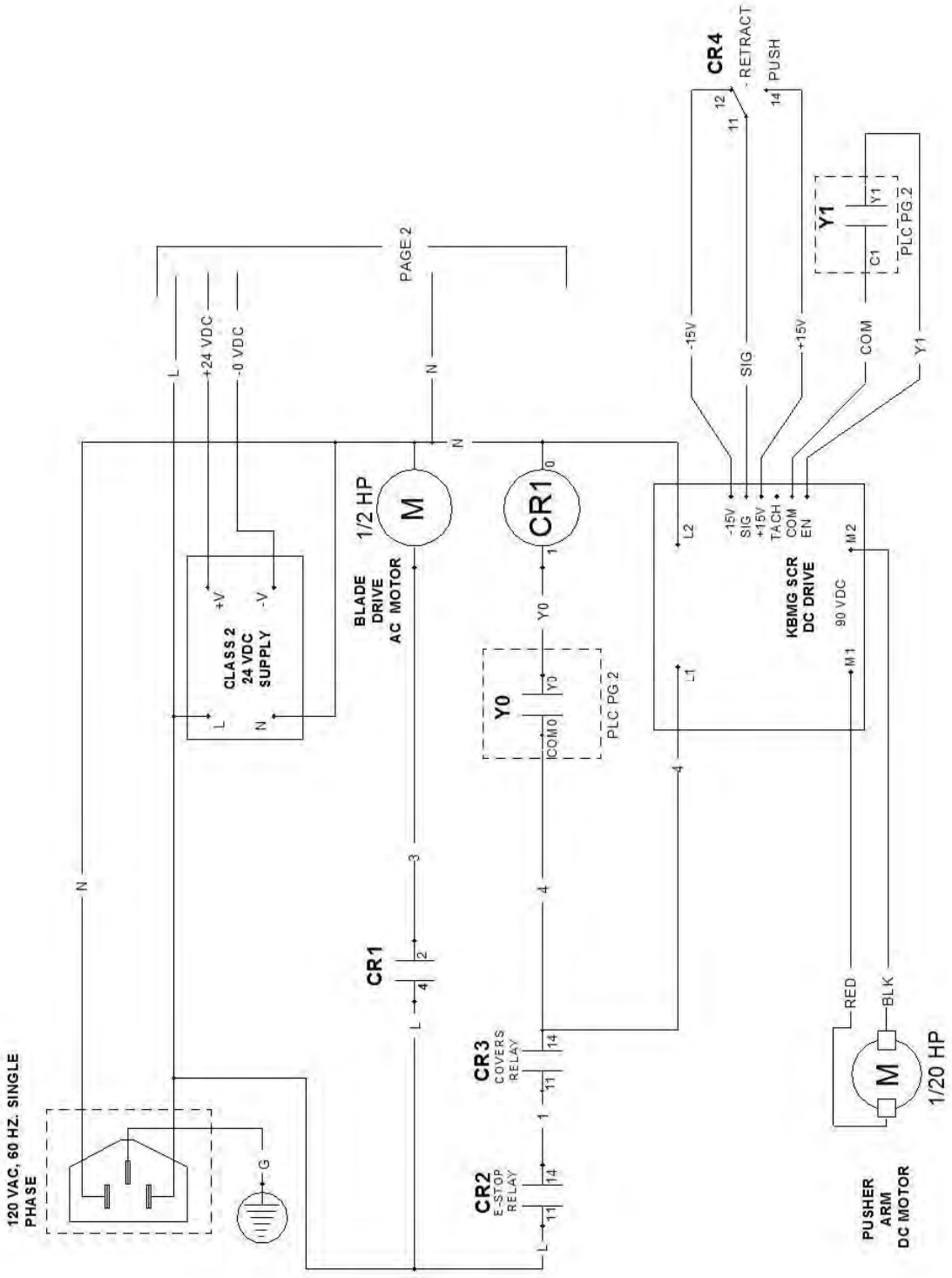

908-N, 918-N, 938-N SIMPLE SLICE BREAD SLICERS

ELECTRICAL DIAGRAM PG. 2 OF 3 (MODELS 908-N AND 918-N) REF: 0918-25010

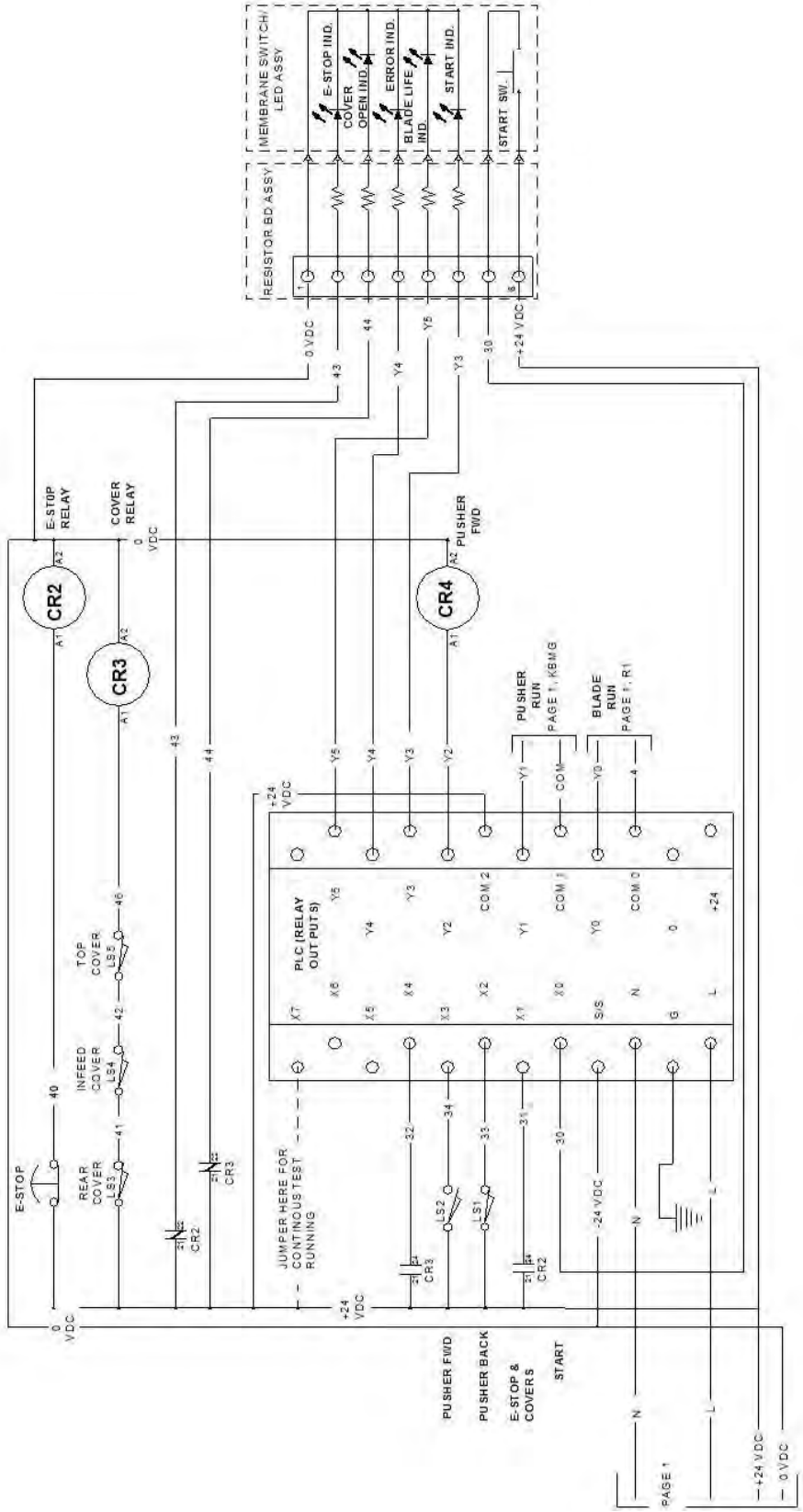

908-N, 918-N, 938-N SIMPLE SLICE BREAD SLICERS

ELECTRICAL DIAGRAM PG. 3 OF 3 (MODEL 938-N) REF: 0938-25010

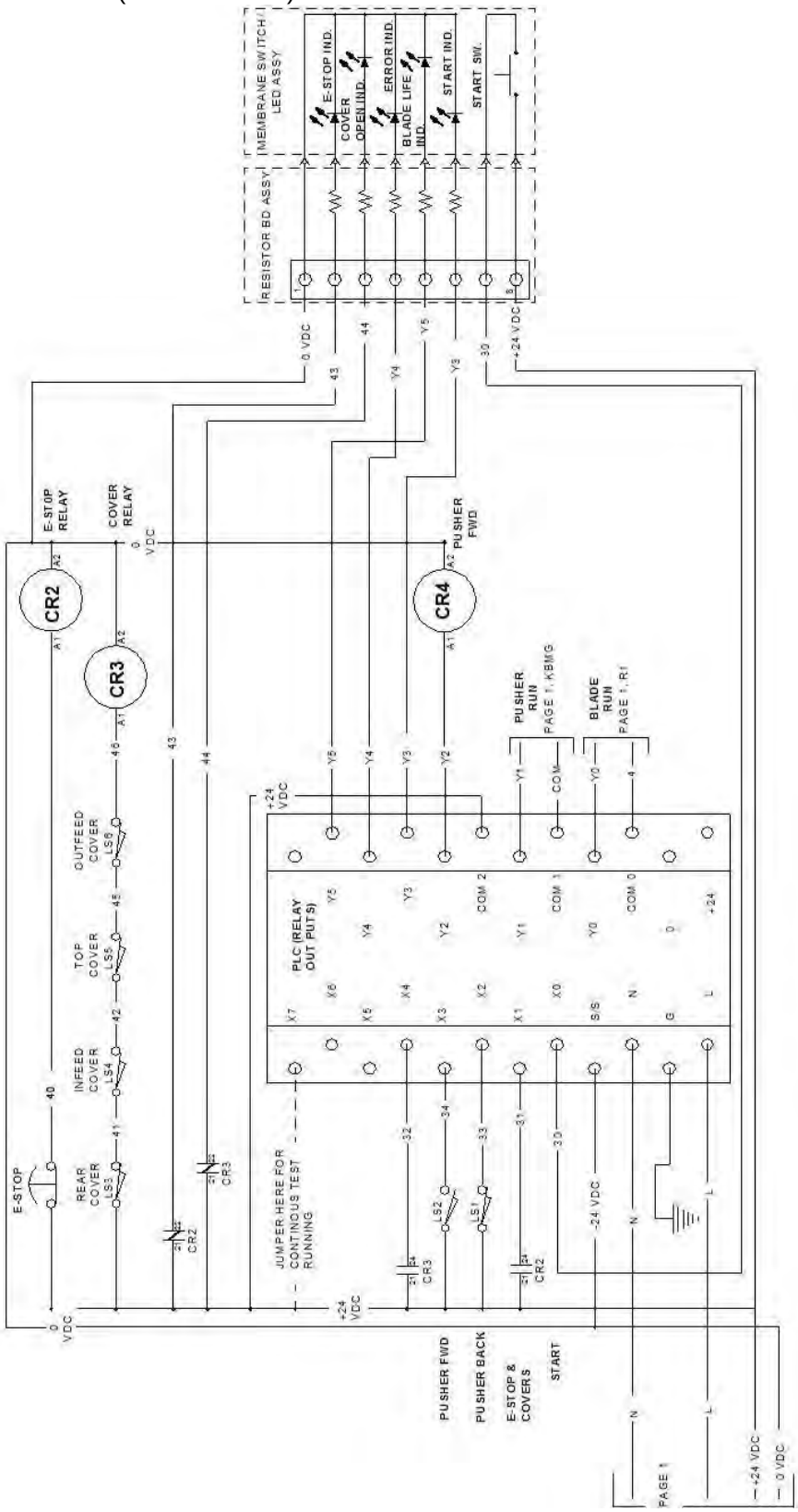

Oliver Packaging and Equipment Company (800) 253-3893
3236 Wilson DR NW Walker, MI 49534 www.oliverquality.com

WARRANTY

PARTS
Oliver Packaging & Equipment Company warrants that if any part of the equipment (other than a part not manufactured by Oliver) proves to be defective (as defined below) within two years after shipment, and if Buyer returns the defective part to Oliver Packaging & Equipment within two years, Freight Prepaid to Oliver Packaging & Equipment's plant in Grand Rapids, MI, then Oliver Packaging & Equipment, shall, at Oliver Packaging & Equipment's option, either repair or replace the defective part, at Oliver Packaging & Equipment's expense.

LABOR
Oliver Packaging & Equipment further warrants that equipment properly installed in accordance with our special instructions, which proves to be defective in material or workmanship under normal use within one (2) year from installation or one (2) year and three (3) months from actual shipment date, whichever date comes first, will be repaired by Oliver Packaging & Equipment or an Oliver Packaging & Equipment Authorized Service Dealer, in accordance with Oliver Packaging & Equipment's published Service Schedule.

For purposes of this warranty, a defective part or defective equipment is a part or equipment which is found by Oliver Packaging & Equipment to have been defective in materials workmanship, if the defect materially impairs the value of the equipment to Buyer. Oliver Packaging & Equipment has no obligation as to parts or components not manufactured by Oliver Packaging & Equipment, but Oliver Packaging & Equipment assigns to Buyer any warranties made to Oliver Packaging & Equipment by the manufacturer thereof.

This warranty **does not** apply to:
1. Damage caused by shipping or accident.
2. Damage resulting from improper installation or alteration.
3. Equipment misused, abused, altered, not maintained on a regular basis, operated carelessly, or used in abnormal conditions.
4. Equipment used in conjunction with products of other manufacturers unless such use is approved by Oliver Packaging & Equipment in writing.
5. Periodic maintenance of equipment, including but not limited to lubrication, replacement of wear items, and other adjustments required due to installation, set up, or normal wear.
6. Losses or damage resulting from malfunction.

The foregoing warranty is in lieu of all other warranties expressed or implied AND OLIVER PACKAGING & EQUIPMENT MAKES NO WARRANTY OF MERCHANTABILITY OR FITNESS FOR PURPOSE REGARDING THE EQUIPMENT COVERED BY THIS WARRANTY. Oliver Packaging & Equipment neither assumes nor authorizes any person to assume for it any other obligations or liability in connection with said equipment. OLIVER PACKAGING & EQUIPMENT SHALL NOT BE LIABLE FOR LOSS OF TIME, INCONVENIENCE, COMMERCIAL LOSS, INCIDENTAL OR CONSEQUENTIAL DAMAGES.

Oliver Packaging and Equipment Company (800) 253-3893
3236 Wilson DR NW Walker, MI 49534 www.oliverquality.com

WARRANTY PROCEDURE

1. If a problem should occur, either the dealer or the end user must contact the Parts and Service Department and explain the problem.

2. The Parts and Service Manager will determine if the warranty will apply to this particular problem.

3. If the Parts and Service Manager approves, a Work Authorization Number will be generated, and the appropriate service agency will perform the service.

4. The service dealer will then complete an invoice and send it to the Parts and Service Department at Oliver Packaging & Equipment Company.

5. The Parts and Service Manager of Oliver Packaging and Equipment Company will review the invoice and returned parts, if applicable, and approve for payment.

Oliver Packaging and Equipment Company (800) 253-3893
3236 Wilson DR NW Walker, MI 49534 www.oliverquality.com

RETURNED PARTS POLICY

This policy applies to all parts returned to the factory whether for warranted credit, replacement, repair or re-stocking.

Oliver Packaging and Equipment Company requires that the customer obtain a Return Material Authorization (RMA) number before returning any part. This number should appear on the shipping label and inside the shipping carton as well. All parts are to be returned prepaid**.** Following this procedure will insure prompt handling of all returned parts.

To obtain an RMA number contact the Repair Parts Deptartment toll free at (800) 253-3893.

Parts returned for re-stocking are subject to a **RE-STOCKING CHARGE**.

Thank you for your cooperation,

Repair Parts Manager
Oliver Packaging and Equipment Company